ORDER NO. MKS9612M301
B3

Service Manual

Video Cassette Recorder

Omnivision VHS

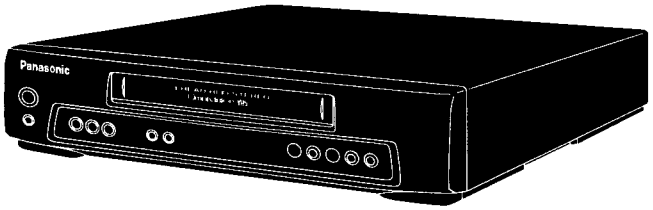

P PV-7400
P PV-7401
P PV-7401-K
P PV-7450
P PV-7451
Q VHQ720
Q VHQ740
Q VHQ760

SPECIFICATIONS

ITEM	SPECIFICATION	1	2	3
Power	Source: 120V AC ± 10%, 60 Hz ± 0.5%	O	O	O
	Consumption: Approx. 18 watts (Power on), Approx. 6 watts (Power off)	O	O	—
	Approx. 23 watts (Power on), Approx. 7 watts (Power off)	—	—	O
Video	Head: 2 rotary heads helical scanning system	O	—	—
	4 rotary heads helical scanning system	—	O	O
	Input Level: VIDEO IN Jack (Phono type) 1.0 Vp-p 75Ω unbalanced Output Level: VIDEO OUT Jack (Phono type) 1.0 Vp-p 75Ω unbalanced Signal-to-Noise Ratio: SP: more than 43 dB LP/SLP: more than 41 dB Horizontal Resolution: Color/Monochrome: more than 230 lines	O	O	O
Audio	Head: Normal Mono: 1 stationary head	O	O	O
	Hi-Fi Stereo: 2 rotary heads	—	—	O
	Input Level: AUDIO IN Jack (Phono type) -10 dBv 50kΩ unbalanced	O	O	O
	Output Level: AUDIO OUT Jack (Phono type) -8 dBv 600Ω unbalanced	O	O	—
	AUDIO OUT Jack (Phono type) -8 dBv 1kΩ unbalanced	—	—	O
	Frequency Response: Normal Mono: SP: 100 Hz ~ 8 kHz	O	O	O
	LP: 100 Hz ~ 6 kHz	O	O	O
	SLP: 100 Hz ~ 5 kHz	O	O	O
	Hi-Fi Stereo: SP/LP/SLP: 20 Hz ~ 20 kHz	—	—	O
	Signal-to-Noise Ratio: Normal Mono: SP: more than 42 dB	O	O	O
	LP/SLP: more than 40 dB	O	O	O
	Hi-Fi Stereo: SP/LP/SLP: more than 60 dB	—	—	O
	Wow and Flutter: Normal Mono: SP: Less than 0.2% WRMS	O	O	O
	LP: Less than 0.3% WRMS	O	O	O
	SLP: Less than 0.4% WRMS	O	O	O
	Hi-Fi Stereo: Less than 0.015% WRMS	—	—	O

ITEM	SPECIFICATION	1	2	3
RF Out	CH 3/CH 4 switchable 72 dBμ (open voltage) 75Ω unbalanced	O	O	O
Tuner	Broadcast Channels: VHF 2 ~ 13, UHF 14 ~ 69 CATV Channels: Midband A through I (14 ~ 22) Superband J through W (23 ~ 36) Hyperband AA ~ EEE (37 ~ 64) Lowband A-5 ~ A-1 (95 ~ 99) Special CATV channel 5A (01) Ultraband 65 ~ 94, 100 ~ 125	O	O	O
Video Signal	EIA Standard (525 lines, 60 fields) NTSC Color Signal	O	O	O
Tape Speed	SP: 1-5/16 i.p.s (33.35 mm/sec), LP: 21/32 i.p.s (16.67 mm/sec), SLP: 7/16 i.p.s (11.12 mm/sec) Record/Playback Time: 8 Hrs with 160 min. type tape used in SLP mode FF/REW Time: Less than 3 min. (120 min. type tape)	O	O	O
Tape Format	Tape width 1/2" (12.7 mm) high density tape	O	O	O
Operating Condition	41°F(5°C) ~ 104°F(40°C) (Temperature) 10% ~ 75% (Humidity)	O	O	O
Dimension	14-15/16"(380 mm) (W) X 3-2/3"(93 mm) (H) X 11-13/16"(300 mm) (D)	O	O	O
Weight	7.5 lbs. (3.4 kg)	O	O	O

1. VHQ720
2. PV-7400/PV-7401/PV-7401-K/VHQ740
3. PV-7450/PV-7451/VHQ760

Weight and dimensions shown are approximate.
Specifications are subject to change without notice.

Panasonic®/Quasar®

©1996 Matsushita-Kotobuki Electronics Industries LTD.
All rights reserved. Unauthorized copying and distribution is a violation of law.

⚠ WARNING

This service information is designed for experienced repair technicians only and is not designed for use by the general public. It does not contain warnings or cautions to advise non-technical individuals of potential dangers in attempting to service a product. Products powered by electricity should be serviced or repaired only by experienced professional technicians. Any attempt to service or repair the product or products dealt with in this service information by anyone else could result in serious injury or death.

Use Marks shown in the chart below to distinguish the different models included in this Service Manual.

MODEL	MARK	MODEL	MARK
VHQ720	A	PV-7450	F
PV-7400	B	PV-7451	G
PV-7401	C	VHQ760	H
PV-7401-K	D	NOT USED	Z
VHQ740	E		

TABLE OF CONTENTS

SAFETY PRECAUTIONS 1-1
PREVENTION OF ESD TO ES DEVICES 1-1
OPERATION GUIDE 1-2
SERVICE NOTES 1-6
IC, Transistor and Chip Part Information 1-14

DISASSEMBLY/ASSEMBLY PROCEDURES
Disassembly/Assembly Procedures of Cabinet Parts 2-1
Disassembly/Assembly Procedures of Mechanism 2-5
Disassembly/Assembly Procedures of Cassette Up Ass'y 2-14

ADJUSTMENT PROCEDURES
Service Fixtures and Tools 2-16
Mechanical Adjustment 2-17
Electrical Adjustment 2-24
Test Points and Control Location 2-26

SCHEMATIC DIAGRAMS
Schematic Diagram and Circuit Board Layout Notes 3-1
Junction Schematic Diagram 3-2
Operation Schematic Diagram 3-4
Main I (Power Supply/System Control/Servo /Operation) Schematic Diagram (A,E,H) 3-7
Main II (Signal Process/Audio) Schematic Diagram (A,E,H) 3-11
Main I (Power Supply/System Control /Servo) Schematic Diagram (B,C,D,F,G) 3-15
Main II (Signal Process/Audio) Schematic Diagram (B,C,D,F,G) 3-19
Main III (Power Supply) Schematic Diagram 3-23
Main IV (Hi-Fi) Schematic Diagram 3-27
Main V (Operation) Schematic Diagram 3-31
UHF/VHF Tuner/TV Demodulator Schematic Diagram 3-35
Head Amp Schematic Diagram 3-39
Hi-Fi Audio/Video Head Amp Schematic Diagram 3-45
Interconnection Schematic Diagram 3-48

CIRCUIT BOARD LAYOUT
Junction C.B.A. 4-1
Main (Power Supply/Signal Process /Audio/Hi-Fi/System Control /Servo/Operation) C.B.A. 4-2
Head Amp C.B.A. 4-10
Hi-Fi Audio/Video Head Amp C.B.A. 4-11
Operation C.B.A. 4-11
Signal Waveform 4-13

BLOCK DIAGRAMS
Power Supply Block Diagram 5-1
Video Signal Path Block Diagram 5-2
Audio Signal Path Block Diagram 5-3
Hi-Fi Audio Signal Path Block Diagram 5-5
System Control Block Diagram 5-7
Servo Block Diagram 5-9
Operation Block Diagram 5-11
Troubleshooting Hints 5-12

EXPLODED VIEWS
1. Mechanism (Top) Section 6-1
2. Mechanism (Bottom) Section 6-2
3. Cassette Up Compartment Section 6-3
4. Chassis Frame and Casing Parts Section 6-4
5. Packing Parts and Accessories Section 6-5

REPLACEMENT PARTS LISTS
Before Replacing Parts, Read the Following 7-1
Mechanical Replacement Parts List 7-2
Electrical Replacement Parts List 7-3

SAFETY PRECAUTIONS

GENERAL GUIDELINES

1. **IMPORTANT SAFETY NOTICE**
   There are special components used in this equipment which are important for safety. These parts are marked by ⚠ in the Schematic Diagrams, Circuit Board Layout, Exploded Views and Replacement Parts List. It is essential that these critical parts should be replaced with manufacturer's specified parts to prevent shock, fire or other hazards. Do not modify the original design without permission of manufacturer.
2. An Isolation Transformer should always be used during the servicing of VCR whose chassis is not isolated from the AC power line. Use a transformer of adequate power rating as this protects the technician from accidents resulting in personal injury from electrical shocks. It will also protect VCR from being damaged by accidental shooting that may occur during servicing.
3. When servicing, observe the original lead dress. If a short circuit is found, replace all parts which have been overheated or damaged by the short circuit.
4. After servicing, see to it that all the protective devices such as insulation barriers, insulation papers shields are properly installed.
5. After servicing, make the following leakage current checks to prevent the customer from being exposed to shock hazards.

LEAKAGE CURRENT COLD CHECK

1. Unplug the AC cord and connect a jumper between the two prongs on the plug.
2. Measure the resistance value, with an ohmmeter, between the jumpered AC plug and each exposed metallic cabinet part on the equipment such as screwheads, connectors, control shafts, etc. When the exposed metallic part has a return path to the chassis, the reading should be between 1MΩ and 5.2M ohm. When the exposed metal does not have a return path to the chassis, the reading must be infinity.

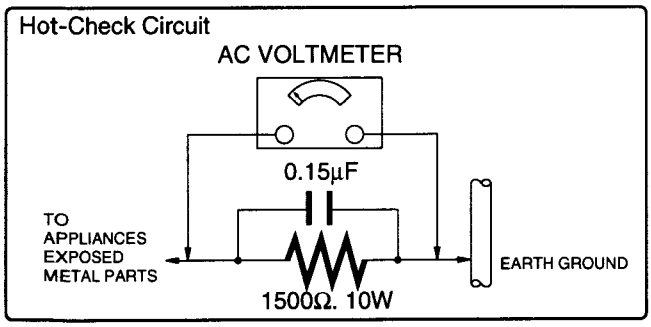

Figure 1

LEAKAGE CURRENT HOT CHECK (See figure 1.)

1. Plug the AC cord directly into the AC outlet. Do not use an isolation transformer for this check.
2. Connect a 1.5K ohm, 10 watts resistor, in parallel with a 0.15 microfarad capacitor, between each exposed metallic part on the set and a good earth ground, as shown in figure 1.
3. Use an AC voltmeter, with 1000 ohms/volt or more sensitivity, to measure the potential across the resistor.
4. Check each exposed metallic part, and measure the voltage at each point.
5. Reverse the AC plug in the AC outlet and repeat each of the above measurements.
6. The potential at any point should not exceed 0.75 volts RMS. A leakage current tester (Simpson Model 229 or equivalent) may be used to make the hot checks, leakage current must not exceed 1/2 milliamp. In case a measurement is outside of the limits specified, there is a possibility of a shock hazard, and the equipment should be repaired and rechecked before it is returned to the customer.

PREVENTION OF ELECTROSTATIC DISCHARGE (ESD) TO ELECTROSTATICALLY SENSITIVE (ES) DEVICES

Some semiconductor (solid state) devices can be damaged easily by static electricity. Such components commonly are called Electrostatically Sensitive (ES) Devices. Examples of typical ES devices are integrated circuits, some field-effect transistors and semiconductor "chip" components. The following techniques should be used to help reduce the incidence of component damage caused by electrostatic discharge (ESD).

1. Immediately before handling any semiconductor component or semiconductor-equipped assembly, drain off any ESD on your body by touching a known earth ground. Alternatively, obtain and wear a commercially available discharging ESD wrist strap, which should remove electrostatic charge for potential shock reasons prior to applying power to the unit under test.
2. After removing an electrical assembly equipped with ES devices, place the assembly on a conductive surface such as aluminum foil, to prevent electrostatic charge buildup or exposure of the assembly.
3. Use only a grounded-tip soldering iron to solder or unsolder ES devices.
4. Use only an antistatic solder removal device. Some solder removal devices not classified as "antistatic (ESD protected)" can generate electrical charge sufficient to damage ES devices.
5. Do not use freon-propelled chemicals. These can generate electrical charges sufficient to damage ES devices.
6. Do not remove a replacement ES device from its protective package until immediately before you are ready to install it. (Most replacement ES devices are packaged with leads electrically shorted together by conductive foam, aluminum foil or comparable conductive material).
7. Immediately before removing the protective material from the leads of a replacement ES device, touch the protective material to the chassis or circuit assembly into which the device will be installed.

CAUTION: Be sure no power is applied to the chassis or circuit, and observe all other safety precautions.

8. Minimize bodily motions when handling unpackaged replacement ES devices. (Otherwise harmless motion such as the brushing together of your clothes fabric or the lifting of your foot from a carpeted floor can generate static electricity (ESD) sufficient to damage an ES device).

"NOTE to CATV system installer:
This reminder is provided to call the CATV system installer's attention to Article 820-22 of the NEC that provides guidelines for proper grounding and, in particular, specifies that the cable ground shall be connected to the grounding system of the building, as close to the point of cable entry as practical".

OPERATION GUIDE

Location of Controls

Remote Control Buttons

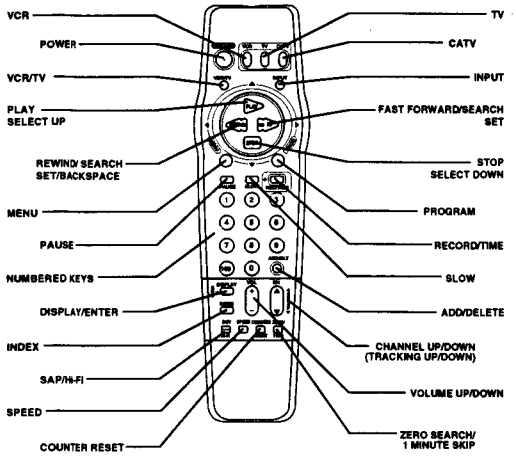

Front View of the VCR

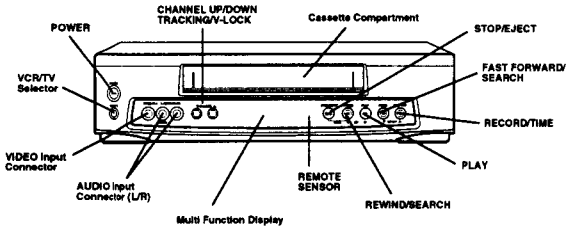

Multi Function Display

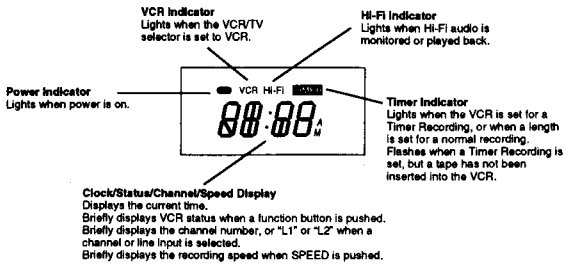

Rear View of the VCR

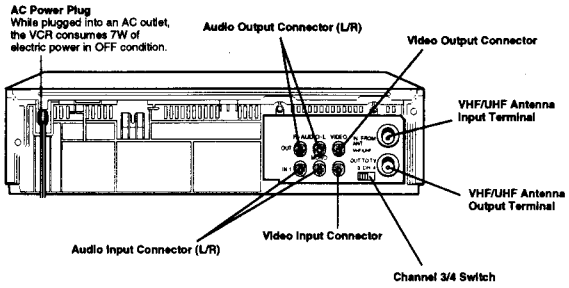

One Time VCR Setup

When the VCR power is first turned on, the language select and channel auto set screen appear automatically followed by a prompt to set the clock.

Check list before you begin.
☐ All TV and VCR connections are made.

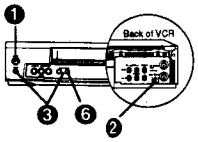

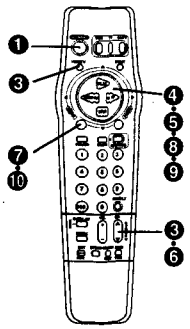

To Set the Language, Channels, and Clock

1. Turn TV and VCR on.
2. Tune TV to VCR output channel (the same one you set on the back of the VCR; CH3 or CH4).
3. Push CH ▲ for English on-screen displays. or Push CH ▼ for Spanish on-screen displays. or Push VCR/TV for French on-screen displays.
   - If wrong language is set, see the "Reset all VCR Memory Functions" section.
   - You can also set the language using the buttons on the VCR.
   - The VCR should be connected to an antenna or cable box.
4. Push ▲▼ to select your hookup, and then push ▶ to set.
   - If you selected CABLE/DSS BOX ▶VCR▶TV, continue with step 5. If not, go to step 6.
5. Push ▲▼ to select your cable box or DSS receiver output channel number, and then push ▶ to enter.
   - If necessary, refer to your cable box manual.
   - If you are using Audio/Video jack connections to your cable box, select and set "VIDEO OUT" as the output channel.
6. Push CH ▲ to start Channel Auto Set.
   - "PLEASE SET CLOCK BY PUSHING MENU KEY" appears.
7. Push MENU to display the SET CLOCK screen.
8. Push ▲▼ to select the MONTH, and then push ▶ to enter.
   - Make each entry within 5 minutes, or the VCR exits the Set Clock screen.
9. Push ▲▼ and ◀▶ to select and set remaining items at right.
   - Pushing ◀ will move back to an item for correction.

   Remaining items to be set: • Date • Year • Time • D.S.T. (Daylight Saving Time)
10. Push MENU twice to start the clock and exit this mode.

Using ▲▼ ◀▶ keys

Whenever a menu or program screen is displayed, the PLAY, STOP, REWIND, and FF buttons on the remote control function as ▲▼ ◀▶ only. For play, stop, rewind, and fast forward functions, use the buttons on the VCR.

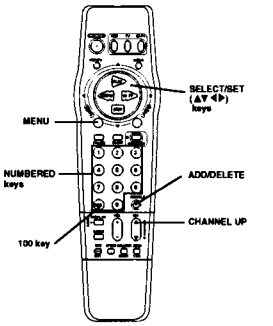

To Change On Screen Display Language

1. Push MENU to display the menu.
2. Push ▲▼ to select the language.
   English: LANGUAGE
   Spanish: IDIOMA
   French: LANGUE
3. Push ▶ repeatedly to change the language.
4. Push MENU to exit this mode.

When Using the 100 key

When selecting CATV channels 100 to 125 with the NUMBERED keys, first push the 100 key and then enter the remaining two digits.
For example, to select channel 125:
Push NUMBERED keys 100, then 2, then 5.

To Replace Channels in Memory

In case you have cable installed, etc.

1. Push MENU to display the menu.
2. Push ▲▼ to select "SET UP CHANNEL," and then push ▶ to display the "SET UP CHANNEL" screen.
3. Push ▲▼ to select "ANTENNA SYSTEM," and then push ▶ to set your antenna system (TV or CATV).
4. Push ▲▼ to select and ▶ to set "AUTO SET."
   - If you use a cable box, it must be left on for auto channel set.
5. Push CH ▲ to start Channel Auto Set.
   - To exit this mode, push MENU twice.

To Set or Reset the Clock

In case the clock is wrong, or a power failure occurred.

1. Push MENU to display the menu.
2. Push ▲▼ to select "SET CLOCK," and then push ▶ to display the "SET CLOCK" screen.
3. Push ▲▼ and ◀▶ to select and set the time and date.
4. Push MENU twice to start the clock and exit this mode.

To Add or Delete a Channel

1. Select a channel using the NUMBERED keys to add or the CH ▲/▼ to delete.
2. Push ADD/DLT to add or delete the channel.
   - To select a channel once it's deleted, use the NUMBERED keys on the remote control. Deleted channels will flash in the Multi Function Display on the VCR when selected.

NOTES
- This VCR will accurately maintain its calendar up to Dec. 31, 2015, 11:59PM.
- Normal TV or Cable channels are automatically selected and placed in memory depending on how your VCR is hooked up.

Playback a Tape

Check list before you begin.

- ☐ All connections are made.
- ☐ TV and VCR are plugged in.
- ☐ TV is turned on and set to the VCR channel (CH 3 or 4).

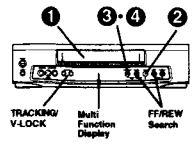

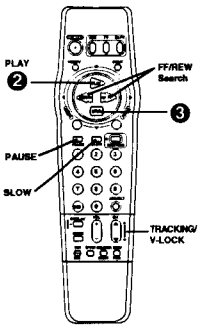

Caution:
Please inspect your cassette tapes for any loose or peeling labels as they may become jammed in your unit.

1. Insert a cassette.
   - VCR power comes on automatically.
   - This indicator lights in the Multi Function Display. – VCR –
2. Push PLAY on the remote or VCR to start playback.
   - Playback begins automatically if cassette has no record tab.
3. Push STOP on the remote or VCR to stop playback.
4. Push STOP/EJECT on the VCR to eject the cassette.
   - You may eject a cassette with power on or off.

To Find a Particular Scene During Playback

Push REW or FF during playback to search for a scene.
- Search speed for SP mode tapes is 9 times and SLP mode tapes 27 times the normal speed.
- Some noise bars will appear during search.

Special Effects During Playback

These features work best in SP or SLP mode. The sound will be muted.

Slow Motion Playback
Push SLOW to start slow motion playback.
Push PLAY or SLOW to release.

Still (Freeze) Frame Picture
Push PAUSE to freeze and release the picture.
- To reduce picture noise, first push SLOW. Then, use CH (TRACKING) ▲/▼ to clear up the picture, then push PAUSE.

Frame by Frame Advance
In Still mode, hold down SLOW to advance the still picture one frame at a time. Push PAUSE to release.

Features for a Quality Picture

Digital Auto Picture
This feature automatically controls the video output signal for less noise depending on the tape condition.

Digital Auto Tracking
This feature continuously analyzes the signal and adjusts for optimum picture quality.

Manual Tracking Control (to reduce picture noise)
Use during Playback and Slow Motion mode to reduce picture noise. Push CH (TRACKING) ▲/▼ during playback until the picture clears up. To return to Auto Tracking mode, push POWER off and then on again.

V-Lock Control (to reduce picture litter)
In Still mode, CH (TRACKING) ▲/▼ operate as a V-Lock control. Push ▲/▼ until the picture is stabilized.

NOTE
- After the VCR is in Still or Slow mode for 3 minutes, it will switch to the Stop mode automatically to protect the tape and the video head.

Record On a Tape

Check list before you begin.

- ☐ All connections are made.
- ☐ VCR is Plugged in.
- ☐ TV is turned on and set to the VCR channel (CH3 or CH4).

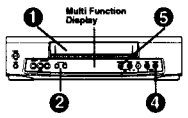

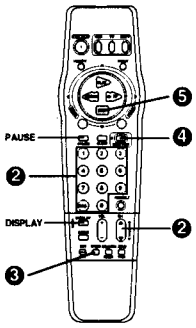

1. Insert a cassette with record tab.
   - VCR power comes on automatically.
2. Push CH ▲/▼ or NUMBERED keys to select a channel.
   - Or, push CHANNEL ▲/▼ on the VCR.
   - Holding down CH ▲/▼ will increase the channel search speed.
   - To record from an outside source, push CH ▲/▼ or INPUT to select "LINE1" or "LINE2".
3. Push SPEED to change the recording speed.
   - SP = Standard Play
     LP = Long Play
     SLP = Super Long Play
4. Push REC/TIME on the remote control or VCR to start recording.
   - To edit out unwanted portions, push PAUSE to pause the recording in progress. To release, push PAUSE again. (After the VCR has been in Pause mode for 5 minutes, it will stop automatically to protect the tape and video head.)
5. Push STOP to stop recording.
   - Or, push STOP/EJECT on the VCR.

One Touch Timer Recording (OTR)
The VCR starts recording and turns itself off at a preset time.
In step 4, push REC/TIME repeatedly to set the length of the recording. Each push will change the stop time as shown.

→ Normal Rec → 0:30 → 1:00 → 1:30 → 2:00 → 3:00 → 4:00 →

- "TIMER" lights in the Multi Function Display.
- The remaining recording time can be displayed by pushing DISPLAY in OTR mode.

Record On a Tape (continued)

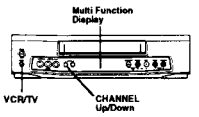

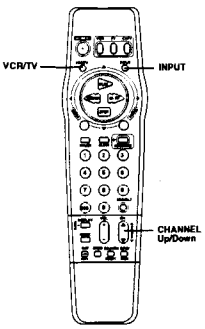

Selecting the Input Mode

Push INPUT. The display will change in the order below.

→ Channel Number → LINE1 → LINE2 →

or

Push CH ▲/▼. The display will change in the order below.

→ 1 – 2 – 3 – (CATV) (TV) – LINE2 – LINE1 – 125 or 69 →

- LINE1: For rear audio/video connection.
  LINE2: For front audio/video connection.
- When LINE is selected, "L1" or "L2" is displayed in the Multi Function Display for about 4 seconds.

Record One Program While Watching Another

1. Push VCR/TV while recording is in progress to turn off the VCR indicator in the Multi Function Display.
2. Use the TV channel controls to select a program. The VCR will continue to record your program while you watch any channel you choose.
   - To switch back and forth between the recording and viewing channel, push VCR/TV.

Selecting Channels at the VCR

1. Turn your TV and VCR on.
   - VCR indicator lights on the Multi Function Display. If indicator doesn't light, push VCR/TV to turn it on.
2. Use CH ▲/▼ on the remote control or VCR to select channels.
   - To switch back to TV channel selection, push VCR/TV to turn VCR indicator off, or simply turn the VCR power off.

Copying Your Tapes (Dubbing)

Connections you'll need to make. (Choose front or rear connection.)
- When connecting to a normal VCR, use the L Audio In jack for proper sound reproduction.

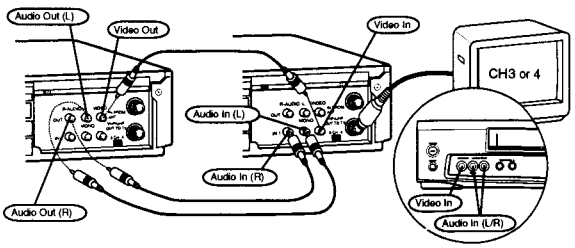

1. **Insert a pre-recorded tape** into the Playing (Source) VCR.
2. **Insert a blank tape** with record tab into the Recording (Editing) VCR.
3. **Select "LINE" Input mode** on the Recording (Editing) VCR. (See "Selecting the Input Mode".)
4. **Push PLAY** on the Playing VCR. **Push PAUSE** at the desired starting point.
5. **Push REC** on the Recording VCR, and then **push PAUSE** immediately thereafter.
6. **Push PAUSE** on both VCRs at the same time, to begin copying.

   To Edit Out Unwanted Parts
   Push PAUSE on the recording VCR while copying is in progress. Push PAUSE again to resume copying.
7. **Push STOP** on both VCRs to stop copying.

To Monitor Dubbing on Your TV

1. Turn your TV on and tune to the Recording VCR channel (CH3 or CH4).
2. Set the VCR/TV Selector on the Recording VCR to "VCR."

Caution:
Unauthorized exchanging and/or copying of copyrighted recordings may be copyright infringement.

Timer Recording

You can set up the VCR to record a one time, daily, or weekly program while you are away or otherwise occupied. Up to 8 programs can be stored in memory.

Check list before you begin.
- ☐ All connections are made.
- ☐ TV and VCR are plugged in and turned on.
- ☐ VCR/TV selector is set to "VCR."
- ☐ Clock is set to correct time.
- ☐ Record tab in place.

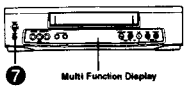

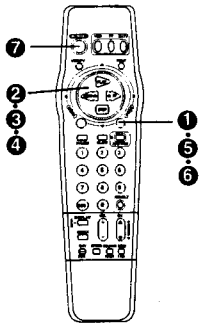

Important notes when using a DSS receiver
- When recording programs via a DSS receiver, the DSS receiver must be left on.
- When recording programs via an antenna or cable, the DSS receiver must be turned off.

1 Push PROG to display the "SET PROGRAM" screen.

2 Push ▲▼ to select "TIMER PROGRAM," and then push ▶ to display the program screen.
- If a program is already in memory, push ▲▼ and ▶ to select an unused program number.

3 Push ▲▼ and ▶ to select and set one of the following:
- 1~31 =One time recording
- DAILY =Same time MON~FRI
- WEEKLY =Same time once a week

Example: Today's Date — 7 — SELECT▲/▼ Selection Order — 8—9……31—1—2……6 — DAILY — WEEKLY (SAT) — WEEKLY (MON) — WEEKLY (SUN)

4 Push ▲▼ and ◀▶ to select and set each of the remaining items at right.

Remaining Items to be set:
- START time
- STOP time
- CH(annel) number, or LINE for outside source recording
- Speed (SP, LP, SLP)

To Make Corrections
Repeatedly push ▶ to move the cursor to the right, or ◀ to move to the left to the incorrect entry and make the correction.

5 Push PROG to end the program.
- This screen appears for confirmation.

To Enter More Programs
Push ▲▼ and ▶ to select and set a blank program number, and then repeat steps 3 and 4.

6 Push PROG to exit this mode and return to the normal screen.

7 Push POWER off to set the timer.
- When recording programs via a cable box, make sure the cable box is left ON and tuned to the desired channel.

Multi Function Display

NOTES
- A cassette with no record tab is ejected and TIMER indicator flashes when the power is turned off to set the timer.
- If the start times of two programs overlap, the lower numbered program will have priority.
- If the start time for a timer recording comes up during a normal recording or One Touch Recording, the timer recording will not be performed.
- If there is a power interruption of more than one minute, the recording will not be performed or continue.

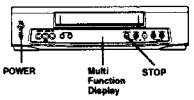

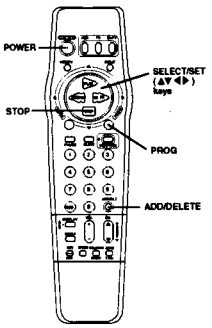

Cancel a Timer Recording:
(Recording is in progress)

Push POWER and then STOP within 10 seconds to cancel the timer recording.
- The TIMER indicator goes out in the Multi Function Display.

Replace Program Contents:
(Recording is not in progress)

1 Push PROG to display the "SET PROGRAM" screen.
2 Push ▲▼ to select "TIMER PROGRAM," and then push ▶ to display all currently set programs.
3 Push ▲▼ and ▶ to select and set a program number.
4 Push ▲▼ and ◀▶ to select and set replacement timer information.
5 Push PROG twice to exit this mode.

Review or Clear Program Contents:
(Recording is not in progress)

1 Push PROG to display the "SET PROGRAM" screen.
2 Push ▲▼ to select "TIMER PROGRAM," and then push ▶ to display all currently set programs.
3 Push ▲▼ to select a program number.
4 Push ADD/DLT to clear the program.
5 Push PROG to exit this mode.

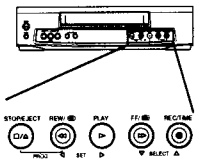

Timer Recording Using VCR Buttons
(Make sure a cassette tape is not inserted in the VCR.)

1 Hold down STOP/EJECT and push REW to enter the Program mode.
2 Push FF or REC/TIME repeatedly or hold down to make selections.
3 Push PLAY to set the item and move on.
- To make corrections, repeatedly push PLAY to move the cursor to the right, or REW to move to the left to the incorrect entry and make the correction.

4 Push STOP/EJECT and REW together to display program contents after all items have been entered.
- You cannot clear programs with the VCR buttons.

5 Hold down STOP/EJECT and push REW, (release REW first, and then release STOP/EJECT) to exit this mode.
6 Insert a cassette with record tab and push POWER off to set the timer.

Special VCR Features

Check list before you begin.
- ☐ All connections are made.
- ☐ VCR is Plugged in.
- ☐ TV is turned on and set to the VCR channel (CH3 or CH4).

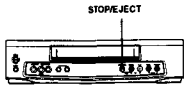

VCR Lock Feature

When activated, this feature prohibits all operations except for timer recording and tape eject. This feature is used to keep children from operating the VCR.

Hold down STOP/EJECT on the VCR for 7 seconds while in Stop or Power OFF mode.

VCR LOCK ACTIVATED

To Cancel the VCR Lock feature,

hold down STOP/EJECT on the VCR for 7 seconds again while in Stop or Power OFF mode.

VCR LOCK OFF

- VCR Lock mode is cancelled automatically after 24 hours as long as the clock is set.

Warning Beeper Feature

When you select BEEPER ON, a short warning will sound each time an invalid entry or incomplete operation is made.

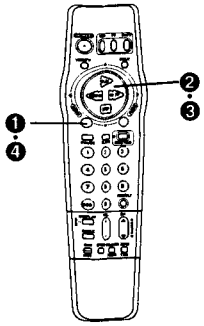

1 Push MENU to display the menu.

2 Push ▲▼ to select "SET UP VCR," and then push ▶ to display the "SET UP VCR" screen.

3 Push ▲▼ to select "BEEPER," and then push ▶ to select "ON" or "OFF."

4 Push MENU twice to exit this screen.

MTS Broadcast/ VHS Hi-Fi Stereo System

Check list before you begin
- ☐ The VCR is connected to a stereo TV, or a mono TV and an external stereo amp or receiver with speakers.
- ☐ The VCR and other components are plugged in and turned on.

Connections to Make

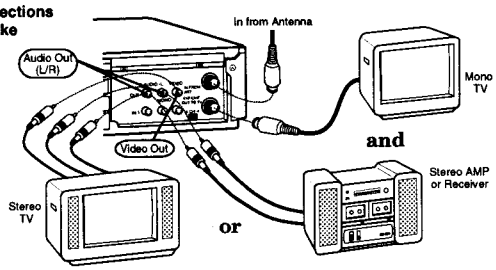

When recording, you may monitor in stereo, by connecting the VCR to either a stereo TV, or a mono sound TV with an external stereo amp and speakers.

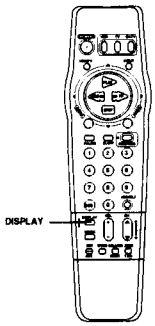

Equipped with dbx® -TV Noise Reduction for true MTS reproduction. dbx® -TV Noise Reduction is required for good stereo separation and audio fidelity. dbx® is a registered trademark, and is licensed by dbx® Technology Licensing.

Receivable Broadcast Types

The following are possible audio broadcast types and on-screen displays. Parenthesis indicate signal(s) not being received. The arrow indicates the selected audio mode.

Push DISPLAY to display the broadcast signal currently being received.

MTS Stereo and SAP broadcast
Multi-channel Television Sound Stereo (main language) and Secondary Audio Program (sub language) broadcasts are being received simultaneously. Select STEREO or SAP audio mode.

MTS Stereo broadcast
Multi-channel Television Sound Stereo broadcast. Select STEREO audio mode.
- If a stereo broadcast is weak and the display flickers, you may want to select the MONO audio mode for better results.

SAP broadcast
Secondary Audio Program (sub language) broadcast. Select SAP audio mode for the sub language.

MONO broadcast
Normal monaural sound broadcast.

MTS Broadcast/ VHS Hi-Fi Stereo System (continued)

With the proper audio mode setting, your VCR can:
1) record and playback an MTS stereo broadcast (main language) in stereo Hi-Fi.
2) record and playback a monaural broadcast (main language) or Secondary Audio Program (sub language) on the Hi-Fi tracks for better quality monaural sound.
3) playback non Hi-Fi tapes in monaural.

- When recording, the selected broadcast sound is always recorded on the left and right Hi-Fi tracks as well as the normal monaural track. This means your tapes can be played back on Hi-Fi as well as non-Hi-Fi VCRs.

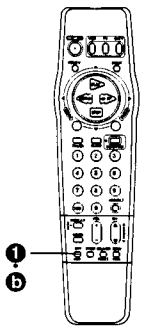

Audio Mode for Recording

1 Push SAP/Hi-Fi repeatedly (each push within 5 seconds) to select the desired audio mode (STEREO, SAP, or MONO).

STEREO ◄
SAP
MONO

- The arrow indicates your selection.

- Please refer to the "Receivable Broadcast Types" section.

2 Do a recording.
See the "Record On a Tape" section.

Audio Mode for Playback

a Playback the tape.
See the "Playback a Tape" section.

b Push SAP/Hi-Fi repeatedly (each push within 5 seconds) to select the desired audio mode (HIFI or NORMAL).

HiFi ◄
NORMAL

- The arrow indicates your selection.

- Select "HIFI" to listen to your stereo recordings with stereo sound, or "NORMAL" for monaural sound.

NOTES
- When purchasing or renting prerecorded tapes, remember that only those recorded in Hi-Fi stereo will play back with true stereo sound. Standard stereo tapes will play back with monaural sound.
- In order to listen to Hi-Fi stereo playback, the VCR AUDIO (L/R) jacks must be connected to a stereo TV or an external stereo amp and speakers.
- When adjusting the tracking during playback, the Hi-Fi audio sound may revert to normal audio sound. This is normal.
- There may be a difference in audio level between Hi-Fi and normal audio playback.

VCR Plus+ Setup

VCR Plus+ programming allows you to set most items of a timer recording by simply entering a special code (PlusCode) found in *TV GUIDE* magazine as well as the TV listings in selected newspapers. In order for your VCR to do a VCR Plus+ recording, or a timer recording of cable stations, some setup is required.

At first, choose your Connection Type.
(Then, follow the instructions under the diagram.)

Connection Type A

<CABLE BOX → VCR → TV>

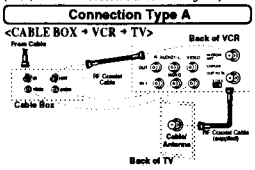

Or, <ANT/CABLE BOX → DSS BOX → VCR → TV>

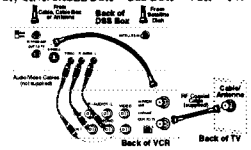

If your system connection looks like one of the diagrams above, do the following.

1. **Complete "Cable Box Setup" at right.**
2. **Go directly to "VCR Plus+ Programming."**

Connection Type B

<VCR → TV>

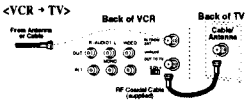

Or, <VCR → CABLE BOX → TV>

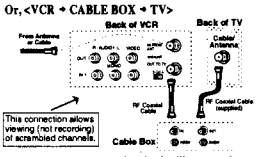

If your system connection looks like one of the diagrams above, do the following.

1. **Skip "Cable Box Setup" at right and turn to "VCR Plus+ Channel Setup."**
2. **Complete "VCR Plus+ Channel Setup."**
3. **Turn to "VCR Plus+ Programming."**

Cable Box Setup
For Connection Type A (see left) only

1 Push MENU to display the menu.

2 Push ▲▼ to select "SET UP CHANNEL," and then push ▶ to display the "SET UP CHANNEL" screen.

3 Push ▲▼ to select "CABLE/ DSS BOX SET UP," and then push ▶ to display the "SELECT HOOKUP" screen.

4 Push ▲▼ to select your hookup, and then push ▶ to set.

- If you selected CABLE/DSS BOX▶VCR▶TV, continue with step 5. If not, push MENU three times and turn to "VCR Plus+ Channel Setup".

5 Push ▲▼ to select your cable box or DSS receiver output channel number, and then push ▶ to enter.

- If necessary, refer to your cable box manual.
- If you are using Audio/Video jack connections to your cable box, select and set "VIDEO OUT" as the output channel.

6 Push MENU twice to end the setup and return to the normal screen.

Go directly to "VCR Plus+ Programming".

VCR Plus+ Setup (continued)

In order for the VCR to read the VCR Plus+ code, some set up is required. A Guide (VCR Plus+) channel number is assigned to each local broadcast and cable station. Because this number sometimes differs from the channel your TV receives the station on, it is necessary to program the VCR with local channel information.

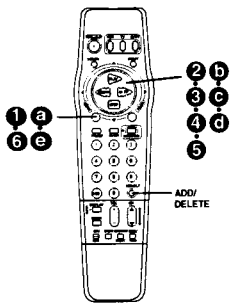

VCR Plus+ Channel Setup
For Connection Type B only

- **Before you begin, complete the Channel Setup Preparations below left.**

Important Note:
If your VCR connection type changes from type A to B, repeat steps 1-4 and select VCR▶CABLE/DSS BOX▶TV or VCR▶TV before proceeding with these steps.

a Push MENU to display the menu.

b Push ▲▼ to select "SET UP CHANNEL," and then push ▶ to display the "SET UP CHANNEL" screen.

c Push ▲▼ to select "VCR Plus+ CH SET UP," and then push ▶ to display the "VCR Plus+ CH SET UP" screen.

IMPORTANT NOTE:
For step "d," use the list you prepared. You may leave lines blank if you don't receive that station, or if the GUIDE CH number and the CATV (or TV) CH numbers are the same.

d Push ▶ to move the shaded area to the right side.

Then, push ▲▼ to change CATV or TV CH number.
Next, push ◄ to set the number.
Now, push ▲▼ to continue.
Repeat this operation until the list is complete.

To Make Corrections
Push ▲▼ and ▶ to select the incorrect CATV or TV CH number. Then, push ▲▼ to change, or ADD/DLT to delete the channel.

e Push MENU three times to exit the VCR Plus+ CH SET UP mode.

NOTES
- Make each entry within 5 minutes or the VCR will leave this mode.
- Once local channels have been programmed, they will stay in memory, even in the case of a power failure.

VCR Plus+ and PlusCode are trademarks of Gemstar Development Corporation. The VCR Plus+ system is manufactured under license from Gemstar Development Corporation.

Channel Setup Preparations

NOTE: Complete the steps on this page if your VCR hook-up resembles "B".

Prepare a list like the example below.
This list will help you smoothly enter the information needed in step "d" at right.

You will need the following to complete the list:
- A line up of normal and/or cable stations you receive along with the channel numbers your TV receives them on. A cable channel line-up chart is supplied by your cable company.
- A list of Guide (VCR Plus+) channel numbers assigned to the stations you receive. This list is available in *TV Guide* and the TV listings found in selected newspapers.

1. Make a chart with 3 columns like the example below. In the left column, fill in the name or call letters of the stations you receive.
2. In the middle column, fill in each station's assigned Guide (VCR Plus+) number found in TV Guide, newspapers, etc.
3. In the right column, fill in the channel number that your TV receives the station on from your channel line-up.

EXAMPLE ONLY

Broadcast or Cable Station Name	Assigned Guide (VCR Plus+) channel no.	Channel no. your TV receives the station on
HBO	33	15
Nickelodeon	38	20
CBS	04	04
FOX	11	

VCR Plus+ Programming

Before you begin, make sure...
- ☐ The clock is set.
- ☐ VCR Plus+ Setup is complete.

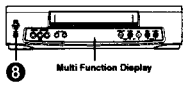

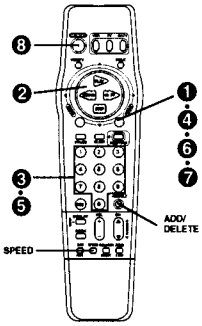

Use normal Timer Recording steps if:
- the PlusCode for a program is not listed.
- you anticipate the program, such as a sporting event, to run over the scheduled stop time.

See "Timer Recording" to:
- cancel a timer recording in progress.
- replace program contents.
- review or clear program contents once set.

Important notes when using a DSS receiver
- When recording programs via a DSS receiver, the DSS receiver must be left on.
- When recording programs via an antenna or cable, the DSS receiver must be turned off.

1 Push PROG to display the "SET PROGRAM" screen.

2 Push ▲▼ to select "VCR Plus+ PROGRAM," and then push ▶ to display the "VCR Plus+" screen.

3 Push the NUMBERED keys to enter the PlusCode number.
- Refer to your local TV listings.

To Make Corrections
Push ◄ repeatedly to delete the PlusCode number. Then, enter the correct number.

4 Push PROG to lock in your program.

5 Push the **1, 2 or 3** key to select the program type.

To change the recording speed: Push SPEED for SP, LP or SLP.

To cancel program contents: Push ADD/DLT.

- If you use connection type "A", the channel shown in this on-screen display will always be the cable box output channel number.

6 Push PROG if contents are acceptable.

7 Push PROG to complete the program.

- If you're using a Cable Box, make sure that it is tuned to the desired channel and the power is left on for timer recording.

- This display may differ depending on your cable box hook-up.

8 Push POWER off to set the timer.

Multi Function Display

NOTES
- For a list of publications that carry the PlusCode numbers in your area, call 1 - 800 - 256 - 4827.
- You can obtain unlisted PlusCode numbers by calling 1 - 900 - 454 - 7587. Call costs approximately $.95 per minute.
- VCR PlusCodes can not be used to program the VCR to record DSS channels.
- Avoid overlapping program times.
- An on-screen display will indicate if an invalid PlusCode number has been entered or when all timer programs are full.

SERVICE NOTES

Simplified Fault Finding Data

(With F.I.P. Model)

Simplified Self-Diagnostic System facilitates finding the cause of the fault. A 4 digit fault code will be displayed in F.I.P. The Simplified Fault finding data is memorized for approximately 12 hours. This data is cleared after it is displayed and then, the Power button is pressed back on.

1. With power turned off, press PLAY button on VCR (for over 3 seconds if VCR is not in shut off condition).

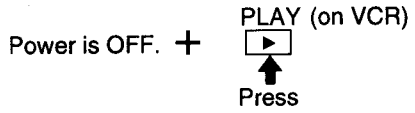

Fig. 1-1

2. Fault code (4 digit number) will be displayed in F.I.P. as shown.

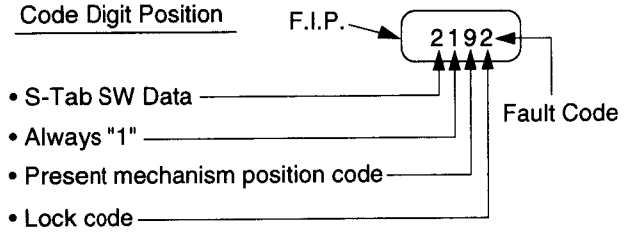

Fig. 1-2

Explanation of Codes	Code No.			
S-Tab SW Data • S-Tab SW is off. • S-Tab SW is on.	 1 2			
Not applicable		1		
Present Mechanism Position Code Mechanism Position is indicated. (Refer to Fig. 1-4.)			1 2 3 4 5 6 7 8 9 A B C D	
Lock Code (See Note 1.) • VCR is not in shut-off condition. • Reel lock. • Cylinder lock. • Exceeds loading/unloading time. (Mechanism Lock) • Exceeds Cassette loading/unloading time. (Cassette Lock) Tape Unloading (direction) Tape Loading (direction)			 1 2	0 1 2 3 4 4

Fig. 1-3

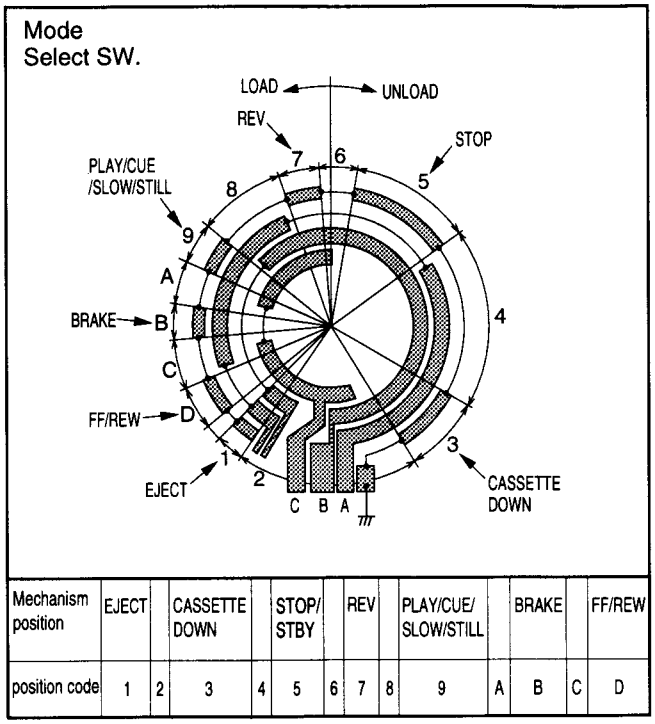

Fig. 1-4

3. While pressing down PLAY button on VCR with power turned off, press any operation button on either VCR, or remote to detect that a key has been pressed.
1st digit changes to "0" only when key is detected.

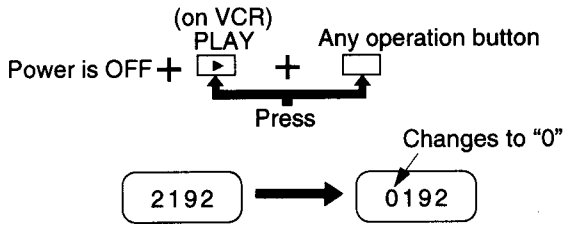

Fig. 1-5

Note:

1. When 1 to 4 listed in Lock code occurs, the VCR goes into VCR shut-off condition. VCR stops and all VCR function buttons except for power become non-operational.

(Without F.I.P. Model)

Simplified Self-Diagnostic System facilitates finding the cause of the fault. Rec LED and/or Timer LED will light up or flash. The Simplified Fault finding data is memorized for approximately 12 hours. This data is cleared after it is displayed with the PLAY button and then the Power button is pressed back on.

1. With power turned off, press PLAY button on VCR (for over 3 seconds if VCR is not in shut off condition).

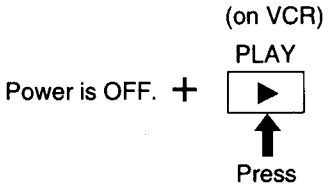

Fig. 1-6

2. Fault indication with the LED will be displayed .

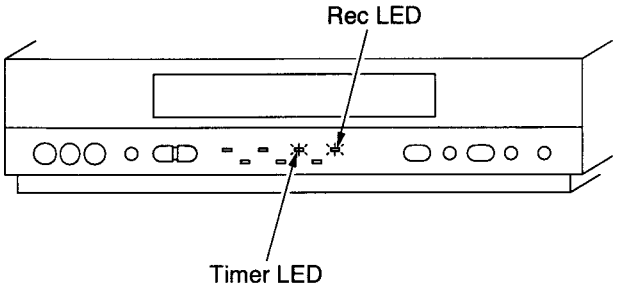

Fig. 1-7

Information	LED
Takeup Reel Lock	Timer LED lights up
Cylinder Lock	Rec LED lights up
Exceeds Loading/Unloading Time	Timer and Rec LED lights up
Exceeds Cassette Loading/Unloading Time	Timer and Rec LED flash

Fig. 1-8

Extension Cable Kit for Service

Use Extension Cable Kit (VUZS0002) when checking and servicing the unit.

Note:
3 types of Extension Cable -2 are included in this kit. Since there is a difference in the number of P3501 Head Amp C.B.A. pins between 2 Head, 4 Head, and Hi-Fi models, be sure to use the proper cable.

Extension Cable Kit (VUZS0002)

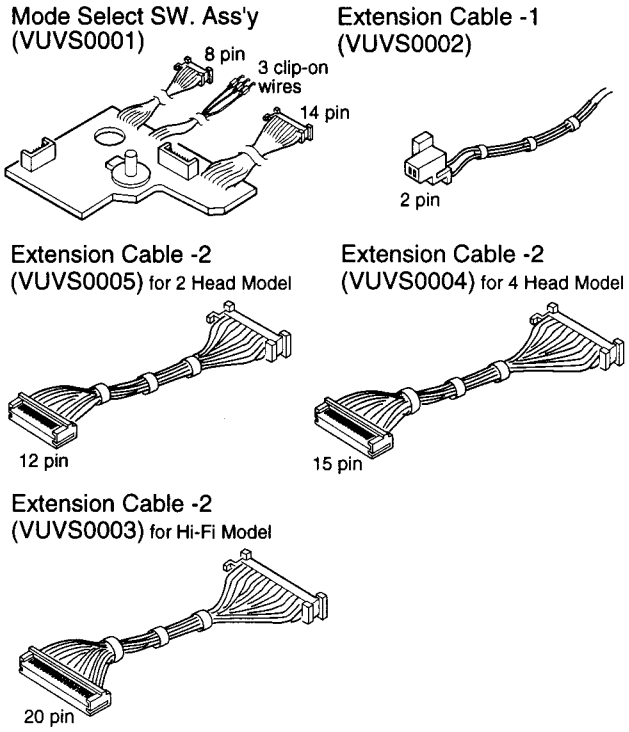

Fig. 2-1

How to place the unit in the Service Position

1. Connect the Extension Cables and secure them with tape as shown. When recording, cover the Safety Tab SW. with masking tape to turn this SW. on.
2. Set Mode Select SW. on the Main C.B.A. to Service Position.
3. Plug the AC plug into an AC outlet.
4. Insert a cassette.
   The power comes on, the tape is fully loaded, and the unit goes into the STOP Mode.
5. Place a jumper between TP6001 and GND to place the unit in Service Mode.
6. Check and/or repair the unit.
7. Press the STOP/EJECT button to eject the cassette.

Note:
When inserting a cassette again, remove the jumper between TP6001 and GND and insert the cassette. Then, reconnect the jumper.

8. After servicing, remove the jumper between TP6001 and GND to release the unit from Service Mode.

Extension Cable Kit Connections:

Extension Cable -1: Full Erase Head Connector on the Mechanism Chassis Unit ~ P4001 on the Main C.B.A.
Note: No change in performance if pins are reversed.

Extension Cable -2: P3501 on the Head Amp C.B.A. ~ P3001 on the Main C.B.A.

Mode Select SW. Ass'y: a) 3 Clip-on Wires ~ Mode Select SW. Connector on the Main C.B.A.

	1 Pin (Not Used)
Red Wire	~ 2 pin
Orange Wire	~ 3 pin
Yellow Wire	~ 4 pin

b) 8 Pin Connector ~ P6002 on the Main C.B.A.

c) 14 Pin Connector ~ P6201 on the Main C.B.A.

d) Set Mode Select SW. on the Mode Select SW. Ass'y to EJECT position and install onto Mechanism Chassis

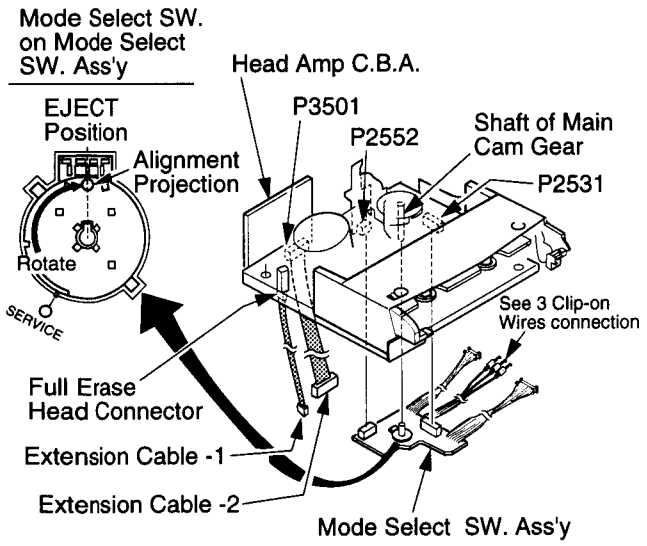

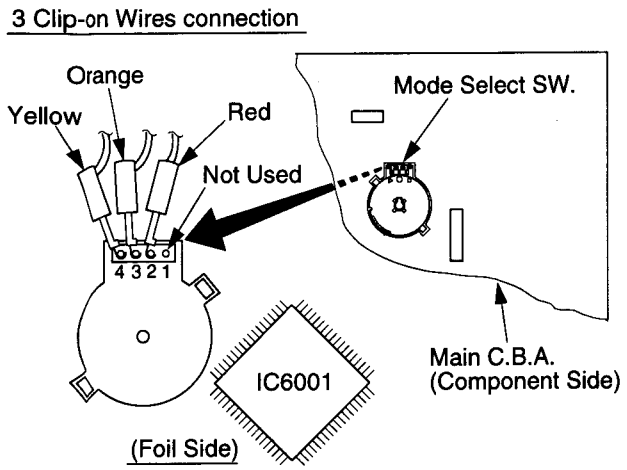

Fig. 2-2

Service Position (1)

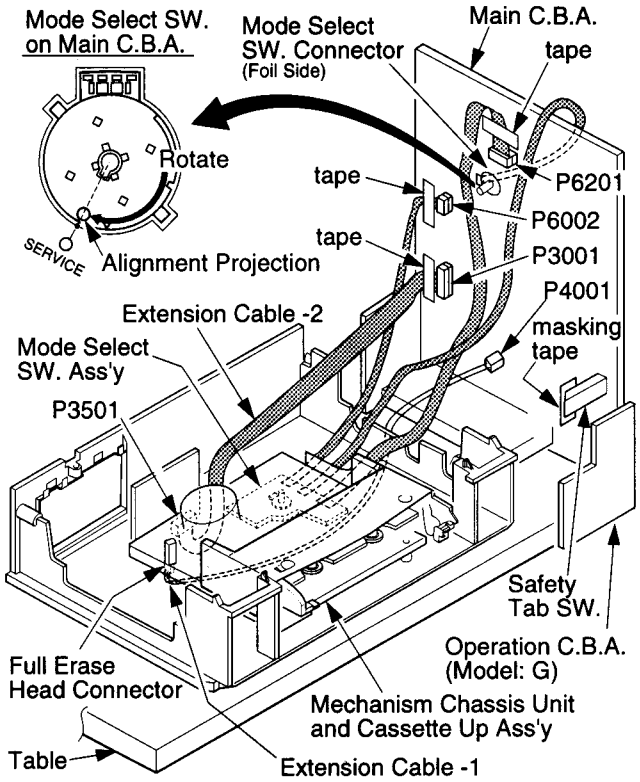

Fig. 2-3

Service Position (2)

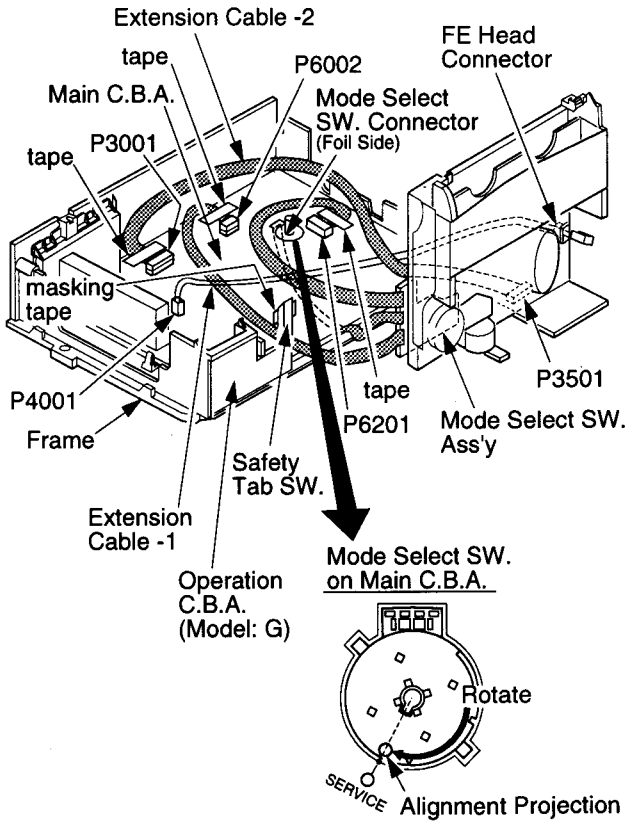

Fig. 2-4

Service Mode

In order to inhibit detection of the Supply & Takeup Photo Transistors, Reel Sensor, and Cylinder Lock, press VCR/TV button and CH down button together on VCR for over 5 seconds in power off condition.

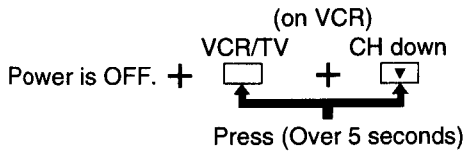

Fig. 3

The power comes on and the unit goes into service mode.

In this mode, Mechanism movement can be confirmed. When removing Cassette Up Ass'y or loading mecanism manually, it can be confirmed without a cassette.

To release from this mode, press POWER button off or disconnect AC Plug.

(Alternative method) Ground the TP6001.

Defeating the Auto Tracking

To defeat the Auto Tracking Function, place the instrument in the STOP mode and place a jumper between TP6003 and TP6009 on the Main C.B.A. The tracking will be placed in the neutral position.

How to set Tracking to the Neutral Position

Ejecting the cassette tape and then reinserting it will reset the tracking to the Neutral position.

How to reset all VCR Memory functions

To reset (clear) the select language, channel auto set and set clock functions to their initial power on condition (power on, **no** cassette inserted), hold down the PLAY and CH UP buttons together on the unit for more than 5 seconds.
Power will shut off.

Method for Manual Loading / Unloading of Mechanism

Turn the Main Cam Gear counterclockwise (for loading) or clockwise (for unloading) using needlenose pliers etc.

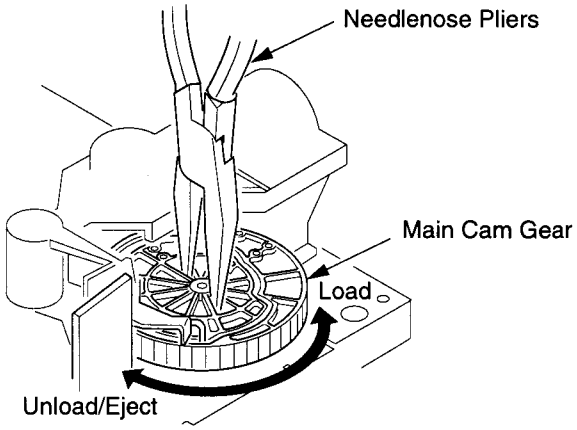

Fig. 4-1

When loading without a cassette, press Portion "a" on both sides of the Holder Unit of Cassette Up Ass'y so that the Lever clears Tab and Hole.

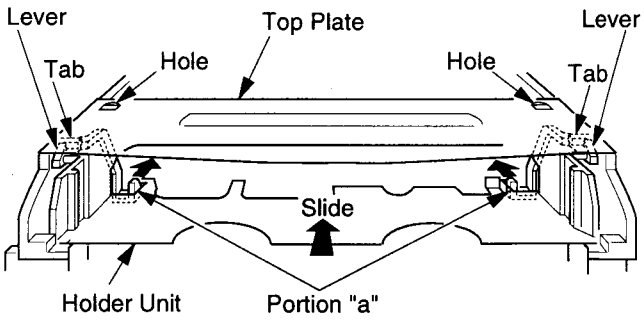

Fig. 4-2

How to Remove a jammed Tape

Manual Method

When a tape jam is encountered, check the tape loading condition and use the following procedure to remove a tape jam.

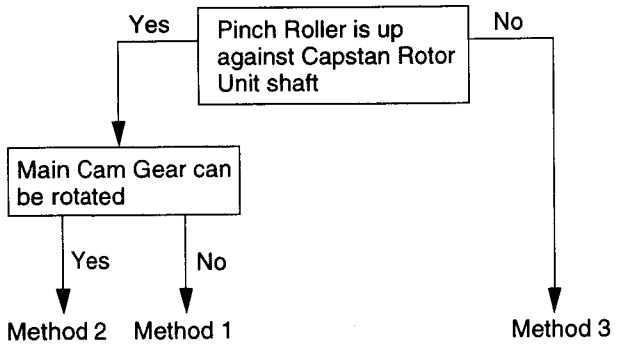

Fig. 5-1

Method -1:

1. While releasing 2 Locking Tabs (A) of Opener Piece, pull the Opener Piece up as far as you can.
2. Move the pin of Pinch Arm Unit out of the groove of the Main Cam Gear so that the Pinch Roller is separated from the shaft of the Capstan Rotor Unit.

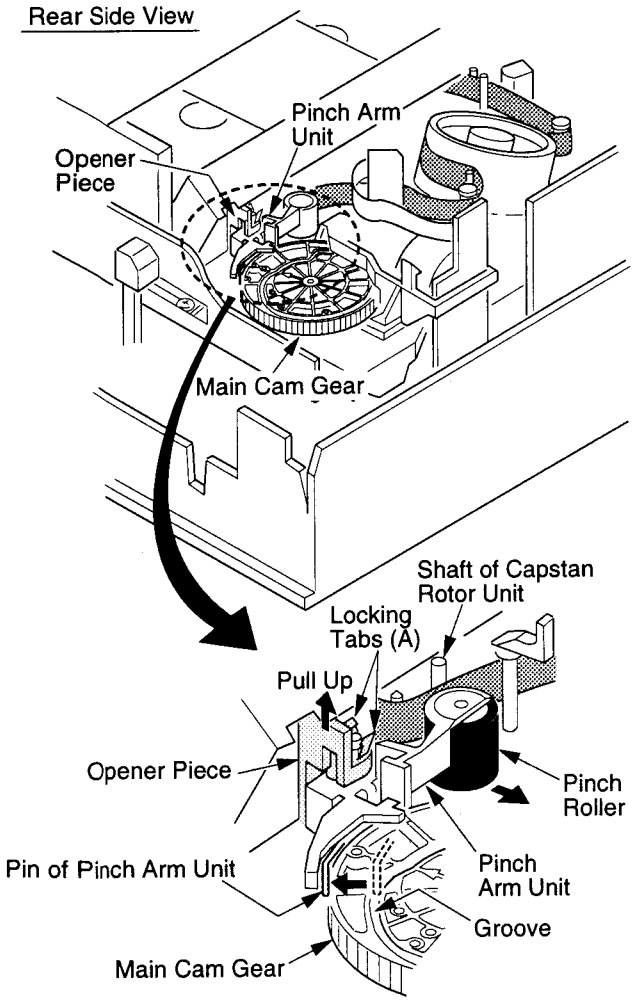

Fig. 5-2

3. Remove the tape from the tape path.
4. Rewind the tape into the cassette by rotating the Center Clutch Unit counterclockwise.
5. Unhook Spring (A) of the Drive Rack Unit.
6. Remove Screw (A).
7. Lift the Drive Rack Unit up so that the slot clears the guide tab. While pulling the Drive Rack Unit out far enough so that it clears the Drive Rack Unit.
8. Slide the Drive Rack Unit as indicated by the arrow to remove the cassette tape from the Cassette Up Ass'y.
9. Check the cause of mechanical trouble.
   After fixing mechanical trouble, adjust Mechanism position in EJECT Position.

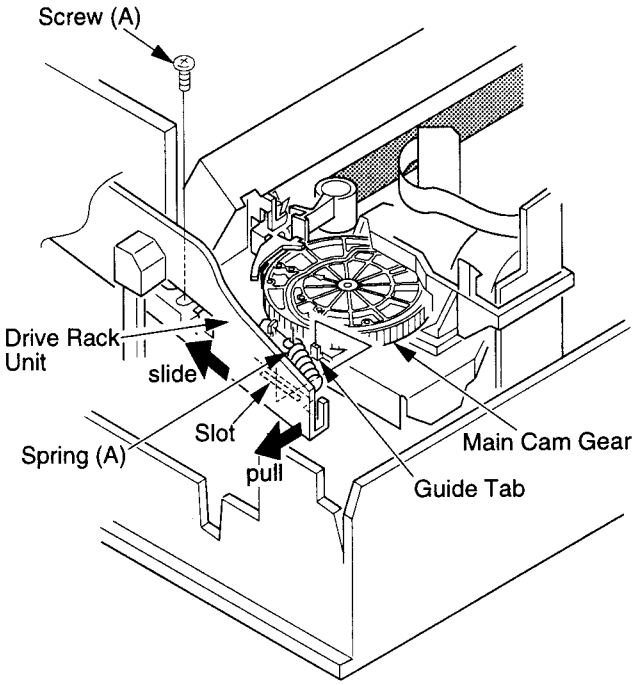

Fig. 5-3

Method -2:

1. Rotate Main Cam Gear clockwise with needlenose pliers, etc. so that the Pinch Roller is separated from the shaft of the Capstan Rotor Unit.
2. Perform Step 3 through Step 9 of Method -1.

Method -3:

1. Perform Step 3 through Step 9 of Method -1.

Electrical Method

Electrical method can only be performed when the mechanism is moved by rotating the Main Cam Gear.

CAUTION:

If loading dose not start in approx. 2 seconds after DC Power Supply is applied, DO NOT continue to apply DC Power Supply. Instead, perform "Manual Method."

Method -1:

1. Remove the solder as shown and apply +10.0 VDC Power Supply (DC + to Portion "a," DC - to Portion "c").
2. When the Loading Posts reach the fully unloaded position, remove the Power Supply.

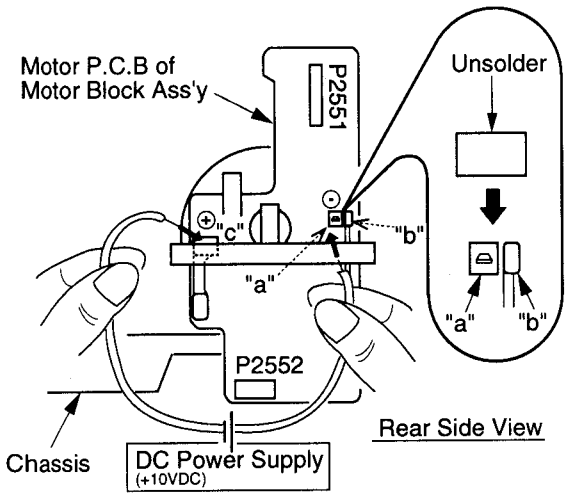

Fig. 6-1

Note:

Be careful not to let the DC Power Supply Unit GND contact the chassis GND. This may damage the Loading Motor Drive IC (IC 2501).
Be sure to apply DC + to Portion "a" of Motor P.C.B.
If DC + is applied to Portion "b", the Loading Motor Drive IC (IC2501) may be damaged.

4. Rewind the tape into the cassette by turning the Center Clutch Unit counterclockwise.
5. Eject the cassette by applying +10.0VDC Power Supply again.
6. After completing the removal procedure, solder Portion "a" and Portion "b."

Method -2:

1. Locate the Jumper (J6004) on the System Control Section of the Main C.B.A. and cut it near the center.

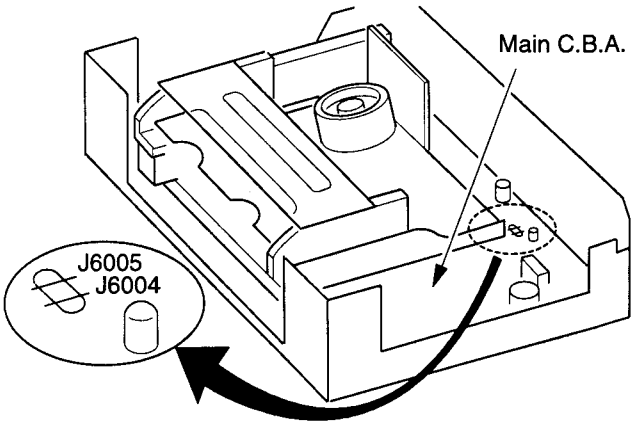

Fig. 6-2

2. Apply +10.0VDC Power Supply to the jumpers. When the Loading Posts reach the fully unloaded position, remove the Power Supply.

Note:

Be careful not to let the DC Power Supply Unit GND contact the chassis GND. This may damage the Loading Motor Drive IC (IC 2501).
Be sure to apply DC + to Portion "a" of J6004.
If DC + is applied to Portion "b" of J6004, the Loading Motor Drive IC (IC2501) may be damaged.

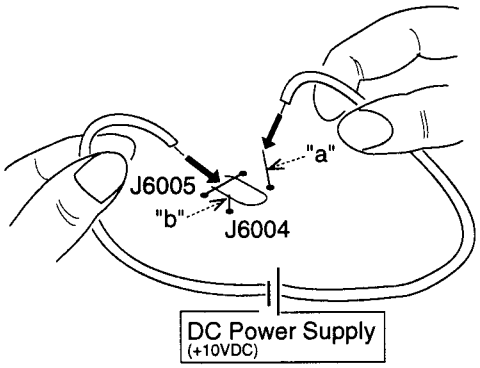

Fig. 6-3

4. Rewind the tape into the cassette by turning the Center Clutch Unit counterclockwise.
5. Eject the cassette by applying +10.0VDC Power Supply again.
6. After completing the removal procedure, resolder Jumper (J6004).

Cylinder Rotation in STOP mode

The cylinder will continue to rotate for approximately 5 minutes after the STOP button is pressed in Play mode etc. Eject the tape in order to stop the cylinder.

Black Screws on the Chassis

Black Screws are used on the Mechanism Chassis to identify screws that require adjustment.

Variable Voltage Isolation Transformer

An Isolation Transformer should always be used during the servicing of VCR whose chassis is not isolated from the AC power line. Use a transformer of adequate power rating as this protects the technician from accidents resulting in personal injury from electrical shocks. It will also protect VCR from being damaged by accidental shorting that may occur during servicing.
Also, when troubleshooting the above type of Power Supply Circuit, a variable isolation transformer is required in order to increase the input voltage slowly.

Special Note

All integrated circuits and many other semiconductor devices are electrostatically sensitive and therefore require the special handling techniques described under the "ELECTROSTATICALLY SENSITIVE (ES) DEVICES" section of this service manual.

Replacement Procedure for Leadless (Chip) Components

The following procedures are recommended for the replacement of the leadless components used in this unit.

1. Preparation for replacement
   a. Soldering Iron
      Use a pencil-type soldering iron that uses less than 30 watts.
   b. Solder
      Eutectic Solder (Tin 63%, Lead 37%) is recommended.
   c. Soldering time
      Do not apply heat for more than 4 seconds.
   d. Preheating
      Leadless capacitor must be preheated before installation. – (266°F ~ 302°F)
      (130°C ~150°C) for about two minutes.

Note:
a. Leadless components must not be reused after removal.
b. Excessive mechanical stress and rubbing of the component electrode must be avoided.

2. Removing the leadless component
   Grasp the leadless component body with tweezers and alternately apply heat to both electrodes. When the solder on both electrodes is melted, remove the leadless component with a twisting motion.

Note:
a. Do not attempt to lift the component off the board until the component is completely disconnected from the board by a twisting action.
b. Be careful not to break the copper foil on the printed circuit board.

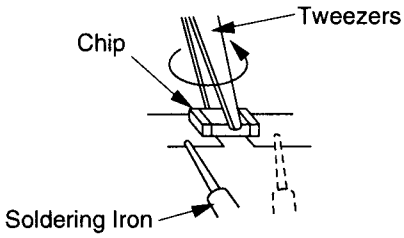

Fig. 7-1

3. Installing the leadless component
   a. Presolder the contact points on the circuit board.

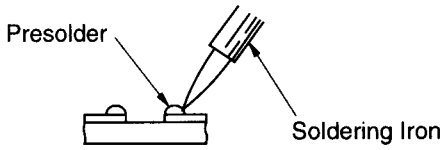

Fig. 7-2

   b. Press the part downward with tweezers and solder both electrodes as shown below.

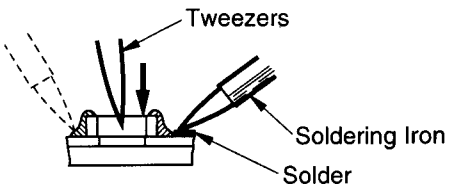

Fig. 7-3

Note:
Do not glue the replacement leadless component to the circuit board.

Model No. Identification Mark

Use Marks shown in the chart below to distinguish the different models included in this Service Manual.

MODEL	MARK
VHQ720	A
PV-7400	B
PV-7401	C
PV-7401-K	D
VHQ740	E
PV-7450	F
PV-7451	G
VHQ760	H

Note:
Refer to Item 5 of Schematic Diagrams and Circuit Board Layout Notes, for mark "Z."

IC, TRANSISTOR AND CHIP PART INFORMATION

MAIN C.B.A.

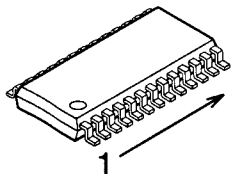

MN3885S,
LC74723M9629

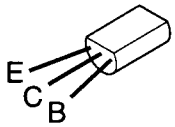

2SD2159

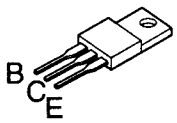

2SC5130LF608,
2SC4533LP.KT,
2SD2375

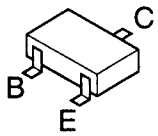

2SD601, 2SD601A,
2SB709, 2SB709A

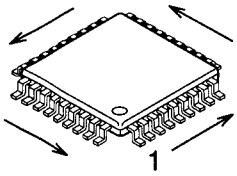

AN3475FBP, AN3962FB-V,
MN675048A5B2
MN675048A5A3
T47C216FF917

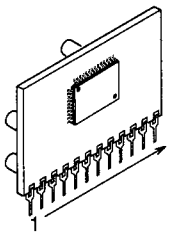

VCRS0213

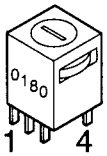

T4101,
EIQ7QF018Q

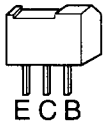

2SD2259,
2SD1991A

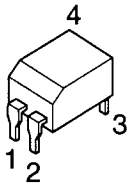

ON3131-S.KT,
ON3131-R.KT,
PS2501-1-X

HEAD AMP C.B.A. or
HI-FI AUDIO/VIDEO HEAD AMP C.B.A.

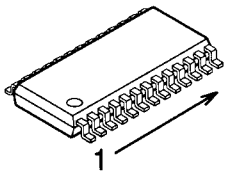

AN3809K, AN3361SB
AN3328S, AN3371SB

HOW TO READ THE IDENTIFICATION MARK OF CHIP COMPONENTS.

MARKING	PART NO.	MARKING	PART NO.
A	2SB709	Y	2SD601
B	2SB709A	Z	2SD601A

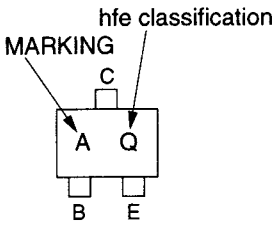

2SB709

HOW TO READ THE VALUES OF THE CYLINDRICAL TYPE CHIP COMPONENTS.

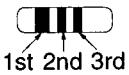

The widest color band must be read first for value.

(a) RESISTOR

There are two types (ERD10LLJ... and ERD10TLJ...) of chip parts.

1) ERD10LLJ : Refer to above type.
2) ERD10TLJ : The narrow color band must be read first for value.

If this part is included in the parts list, be sure that the color band is read properly when servicing.

(b) CAPACITOR

Because of the width of the color bands, the reading direction cannot be specified. However, the color band can be read on either side. Be sure to confirm the value using the schematic diagram.

CAUTION:

Once chip parts are removed, they must not be reused. Always use a new part when installing a chip part.

DISASSEMBLY/ASSEMBLY PROCEDURES

DISASSEMBLY/ASSEMBLY PROCEDURES OF CABINET PARTS

Disassembly Flowchart

Perform all disassembly procedures in the order described in the "Disassembly Flowchart" shown below. When reassembling, use the reverse procedure.

CAUTION:
Disconnect AC plug before disassembly.

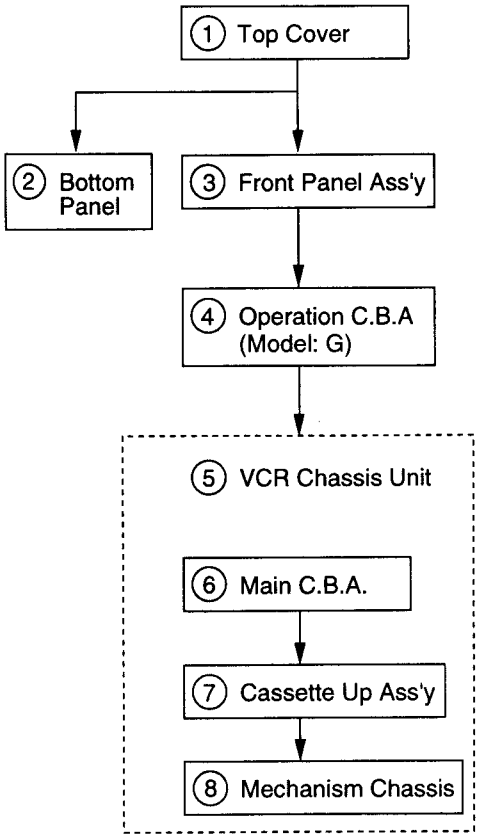

Fig. D1

Top Cover

Disassembly Procedure

1. Remove 2 Screws (A) and 2 Screws (B).
2. Lift up on the rear portion of the Top Cover and remove.

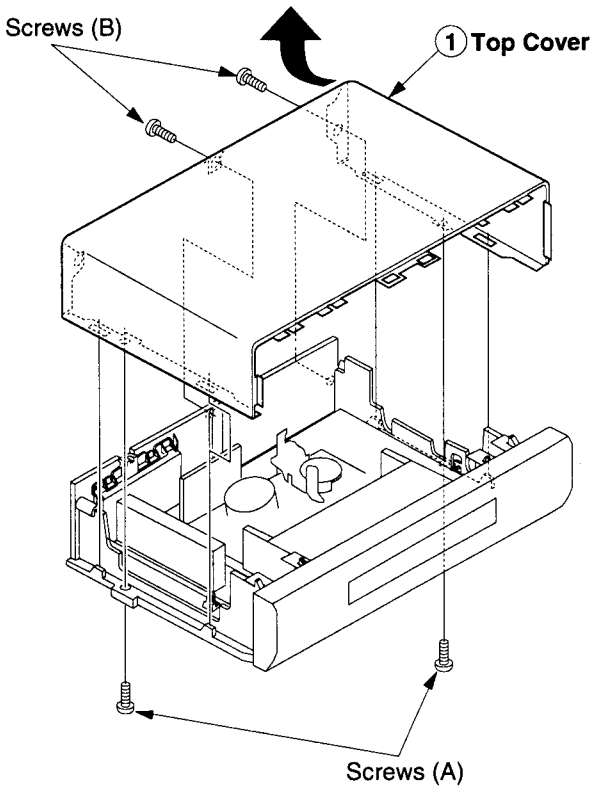

Fig. D2

Bottom Panel

Disassembly Procedure

1. Remove 3 Screws with Washers (A), (B), and Screw (C).
2. While pushing 2 Locking Tabs (A) to release, slide the Bottom Panel and remove.

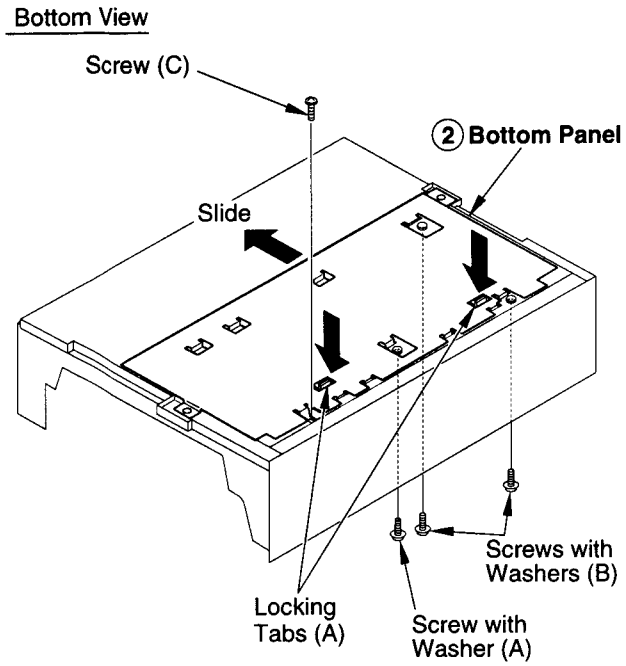

Fig. D3

Front Panel Ass'y

Disassembly Procedure

1. Release 2 Locking Tabs (B) on the top left.
2. Release 2 Locking Tabs (C) on the top right.
3. Release 3 Locking Tabs (D) on the bottom side. Then, remove the Front Panel Ass'y.

Note:
Work carefully so as not to break the Tabs.

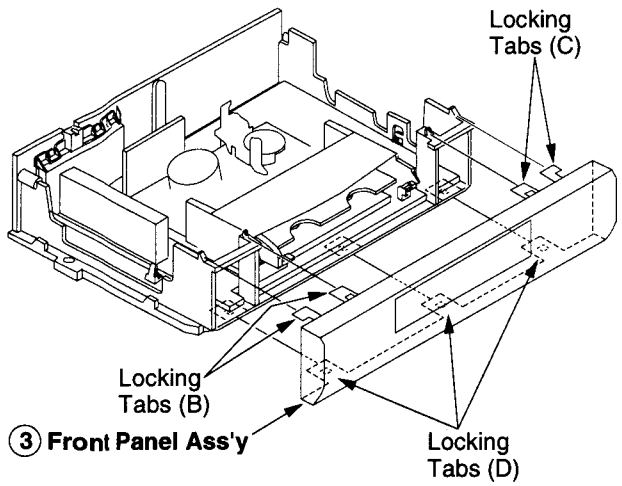

Fig. D4-1

Reassembly Notes

Installation of Front Panel Ass'y
CAUTION:

1) When installing the Front Panel Ass'y, swing the Cassette Door-Lid all the way open until the Cassette Door tab clears the Opener Lever.
2) Make sure that all locking tabs are aligned properly. Then, press the Front Panel straight in.

   If the Front Panel Ass'y is pressed in at an angle, operation buttons on the Main C.B.A. may be damaged or caused to be fixed in the **ON** position.

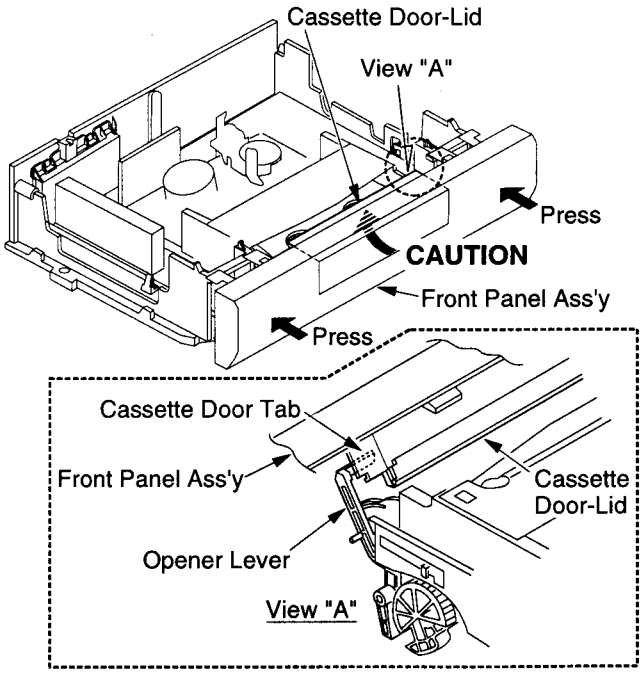

Fig. D4-2

Operation C.B.A. (Model: G)

Disassembly Procedure

1. Release 2 Locking Tabs (H).
2. Disconnect Connector P6301 on the Operation C.B.A.

Note:
Work carefully so as not to break the Tabs.

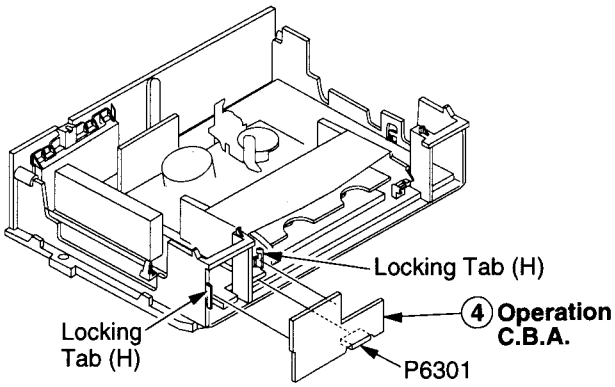

Fig. D5

VCR Chassis Unit

Disassembly Procedure

1. Slide the Holder Unit (refer to "Method for Manual Loading/ Unloading of Mechanism" in Service Notes) to remove 2 Screws (D).
2. Remove Screws (E), (F), (G), (H), and (I).

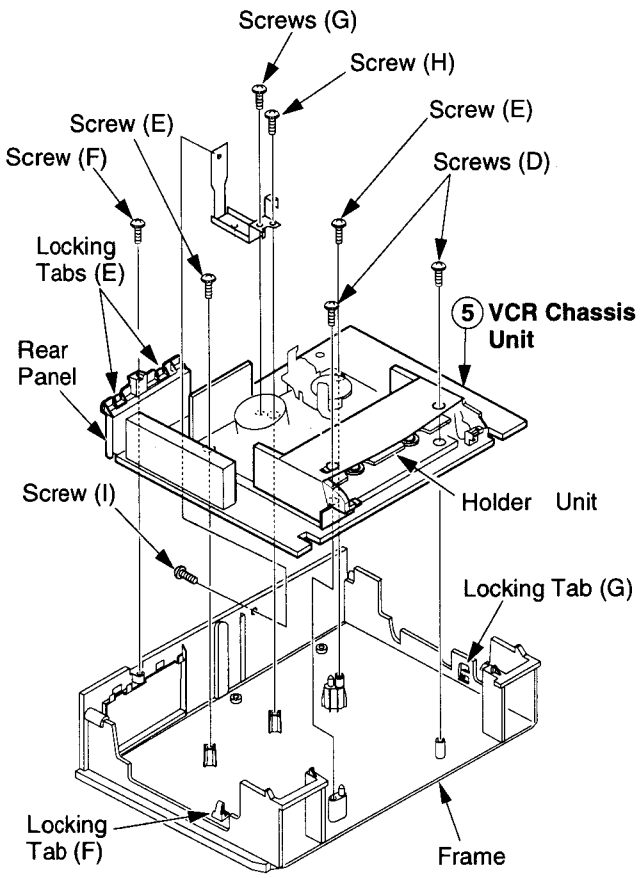

Fig. D6-1

3. Push 2 Locking Tabs (E) inward until clear while lifting the Rear Panel.
4. Push Locking Tab (F) outward while gently lifting the left side of the Main C.B.A. (Portion "A").
5. While pushing Locking Tab (G) outward, lift the right side of the Main C.B.A. until even with Portion "A". Then, lift the VCR Chassis Unit out of the Frame.

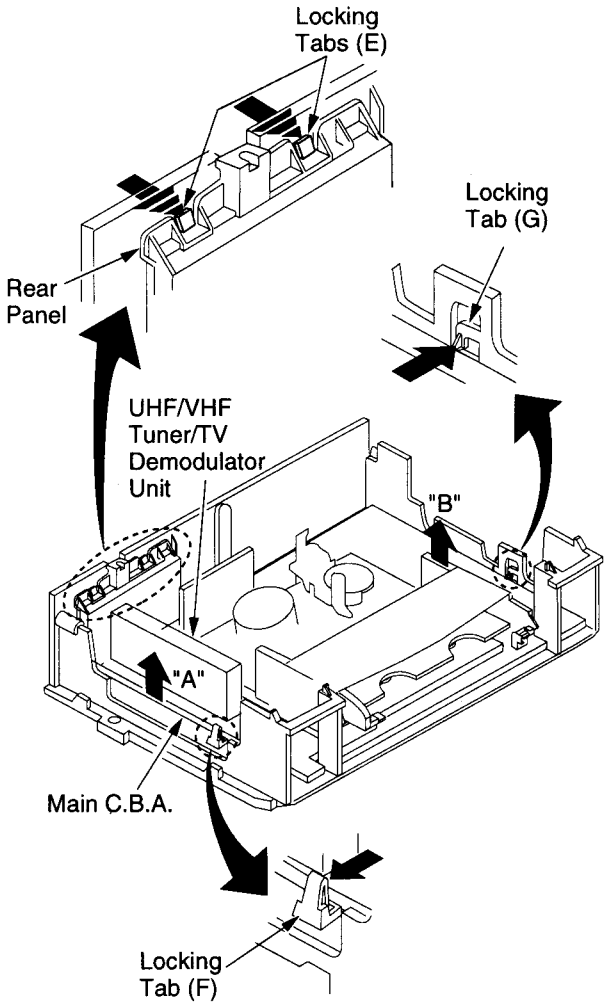

Fig. D6-2

Note:

1. DO NOT pull upward on the UHF/VHF Tuner/TV Demodulator Unit because you may crack the Main C.B.A.
2. Work carefully so as not to break tabs.

Main C.B.A.

Disassembly Procedure

1. Disconnect 4 Connectors of P2531, P2552, P3501 and P4001.
2. Carefully lift the Mechanism Chassis Unit straight out from the Main C.B.A.

Note:
Work carefully so as not to break Sensor LED, when lifting the Mechanism Chassis Unit.

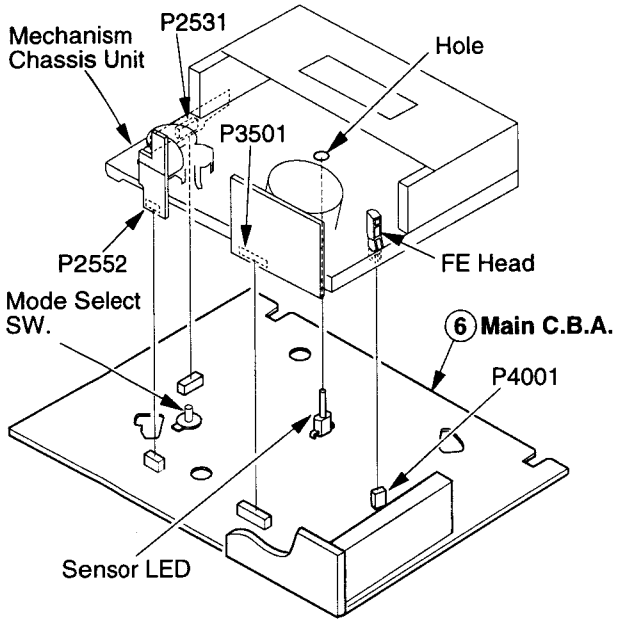

Fig. D7-1

Reassembly Notes

1. Make sure that the Mode Select SW. on the Main C.B.A. is in EJECT position before installing the Mechanism Chassis Unit onto the Main C.B.A. If not, rotate the Mode Select SW. until the alignment projection is in the EJECT Position.

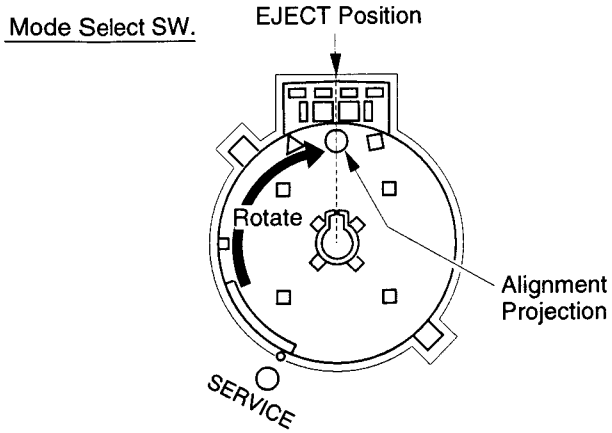

Fig. D7-2

2. Be sure to install the Mechanism Chassis Unit straight onto the Main C.B.A. so that the Sensor LED clears the hole in the Mechanism Chassis Unit.
3. Be sure that 4 Connectors (P2531, P2552, P3501, and P4001) are aligned and seated securely.

Cassette Up Assembly

Disassembly Procedure

1. Slide Holder Unit (refer to "Method for Manual Loading/ Unloading of Mechanism" in Service Notes) to remove 2 Screws (J).
2. Remove Screw (K).
3. Unhook Spring (A).
4. Slide the Cassette Up Ass'y towards the front to release Tab (B). Then, lift it up and remove.

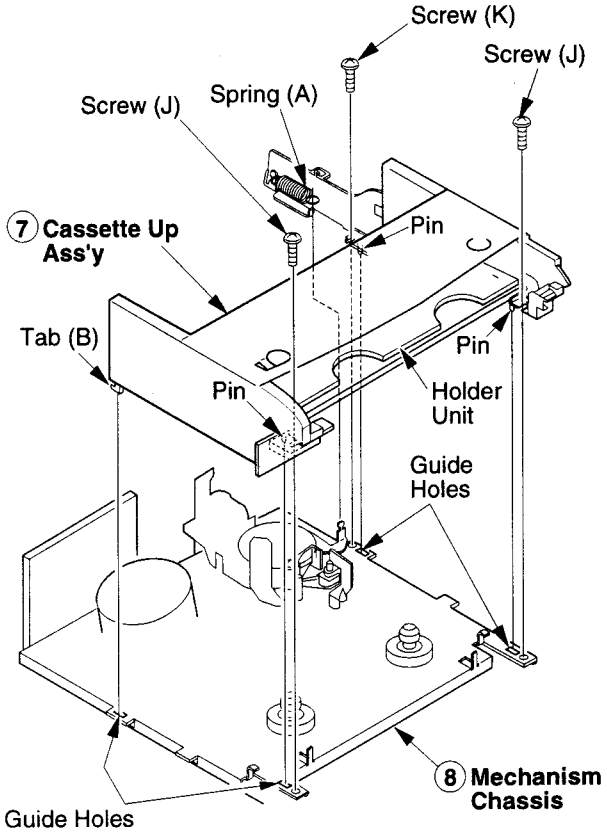

Fig. D8

Reassembly Notes

Installation of Cassette Up Ass'y

1) Confirm that the 3 pins and Tab (B) under the Cassette Up Ass'y are in each of the 4 Guide Holes on the Mechanism Chassis when installing the Cassette Up Ass'y. Then, slide the Cassette Up Ass'y towards the back.
2) Tighten 2 Screws (J) and Screw (K).
Be careful not to tighten them too much, or the Cassette Up Ass'y may be bent outward.

DISASSEMBLY/ASSEMBLY PROCEDURES OF MECHANISM

Disassembly Method

This chart indicates Step/Location No. of Parts to be serviced and prior steps to gain access items to be serviced when disassembling. When reassembling, perform the step(s) in the reverse order.

Step /Loc. No.	Part	Prior Step(s)	Step /Loc. No.	Part	Prior Step(s)	Step /Loc. No.	Part	Prior Step(s)	Step /Loc. No.	Part	Prior Step(s)
1	Cylinder Unit	----------	11	Main Lever Drive Arm	3, 4, 5, 7, 8, 9	21	Loading Post Base-S Unit	16	31	S Loading Arm Unit	30
2	Upper Cylinder Unit	----------	12	T Brake Unit	9	22	Loading Post Base-T Unit	9, 20	32	Center Clutch Unit	----------
3	Opener Piece	----------	13	Changing Lever A	9	23	Capstan Rotor Unit	----------	33	Changing Gear Spring	32
4	Pinch Arm Unit	3	14	T Reel Table	9, 12, 13	24	Capstan Holder Unit	23	34	Changing Gear	32, 33
5	Motor Block Ass'y	----------	15	Full Erase Head	----------	25	SS Brake Arm Unit	----------	35	Changing Lever-B	32, 33, 34
6	Audio Control Head Unit	5	16	Tension Arm Unit	----------	26	Junction C.B.A.	----------	36	Idler Arm Unit	32, 33, 34
7	Main Cam Gear	3, 4, 5	17	S Spring Arm	----------	27	Capstan Stator Unit	23, 25, 26	37	Loading Rack	9, 30
8	Drive Rack Arm	3, 4, 5, 7	18	S Reel Table	16, 17	28	Sub Rotor	23, 25, 26, 27	38	Grounding Plate Unit	----------
9	Main Lever	----------	19	S Brake Arm Unit	9, 16, 17, 18	29	PCB Holder	23, 25, 26, 27	39	FG Head	----------
10	P5 Arm Unit	9	20	Main Lever Guide	9	30	T Loading Arm Unit	----------			

Step/Loc. No.: Order of steps in procedure. Part : Part to be removed or installed. Prior Step(s) : Steps to be completed prior to the current step.

Note: When the mechanical parts surrounded by rectangle are removed or replaced, be sure to perform necessary adjustment or alignment procedures according to the mechanical adjustment procedures section and disassembly/assembly procedures of mechanism section.

Perform all disassembly and alignments procedures in EJECT Position.

TOP VIEW

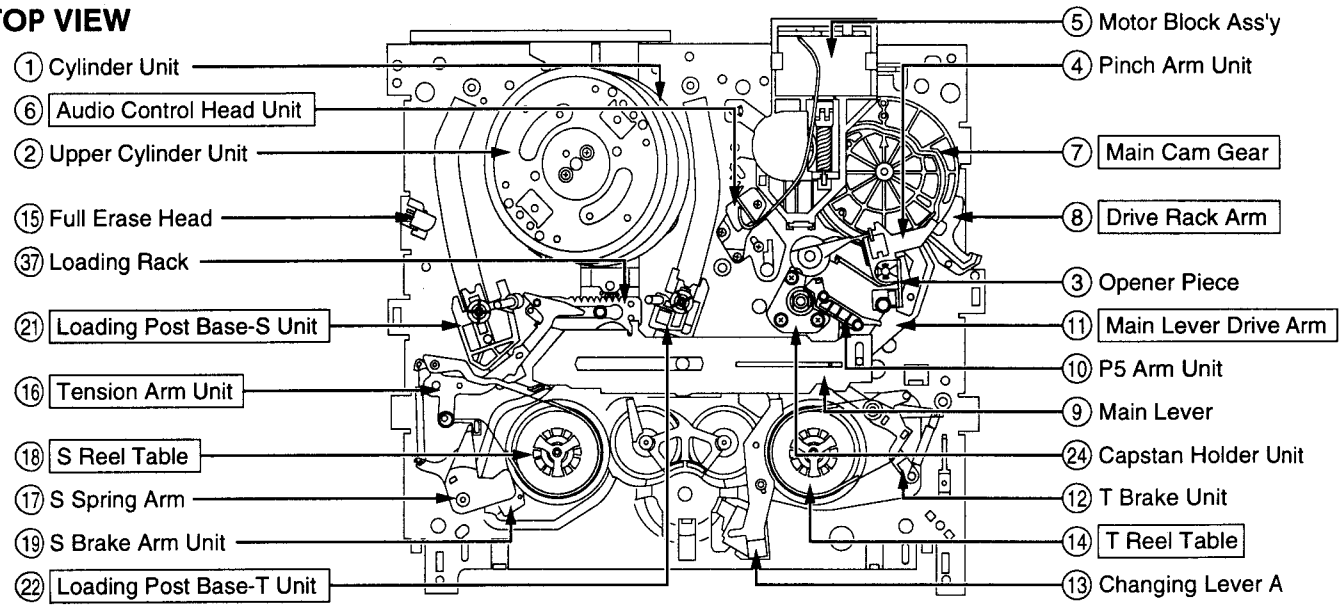

BOTTOM VIEW

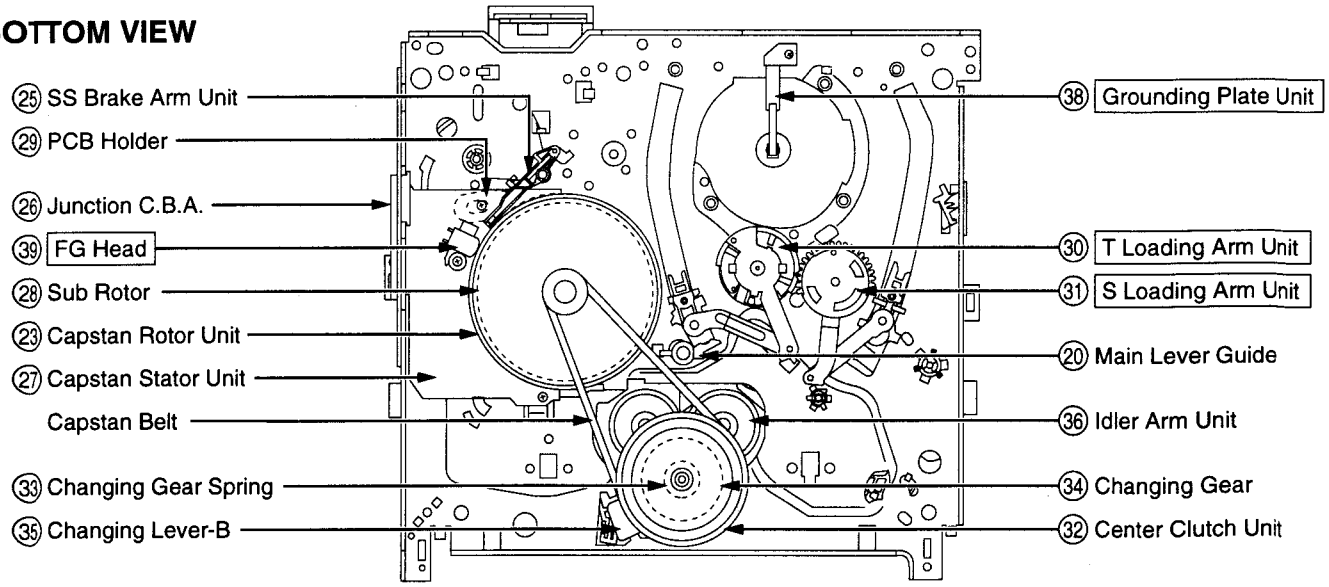

Fig. J1

Cylinder Unit

Disassembly Procedure

1. Remove 3 Screws (A) and 2 Screws with Washers (A). Then, lift the Cylinder Unit and the Head Amp C.B.A. out from the mechanism.
2. Unsolder P3502 and P3503. Then, remove the Head Amp C.B.A.

Note:
Use extreme care when removing or replacing the Cylinder Unit. Do not touch the Video Heads during servicing.

CAUTION:
When removing the Cylinder Unit, avoid touching IC2601 on the Head Amp C.B.A. because it is **HOT** during operation.

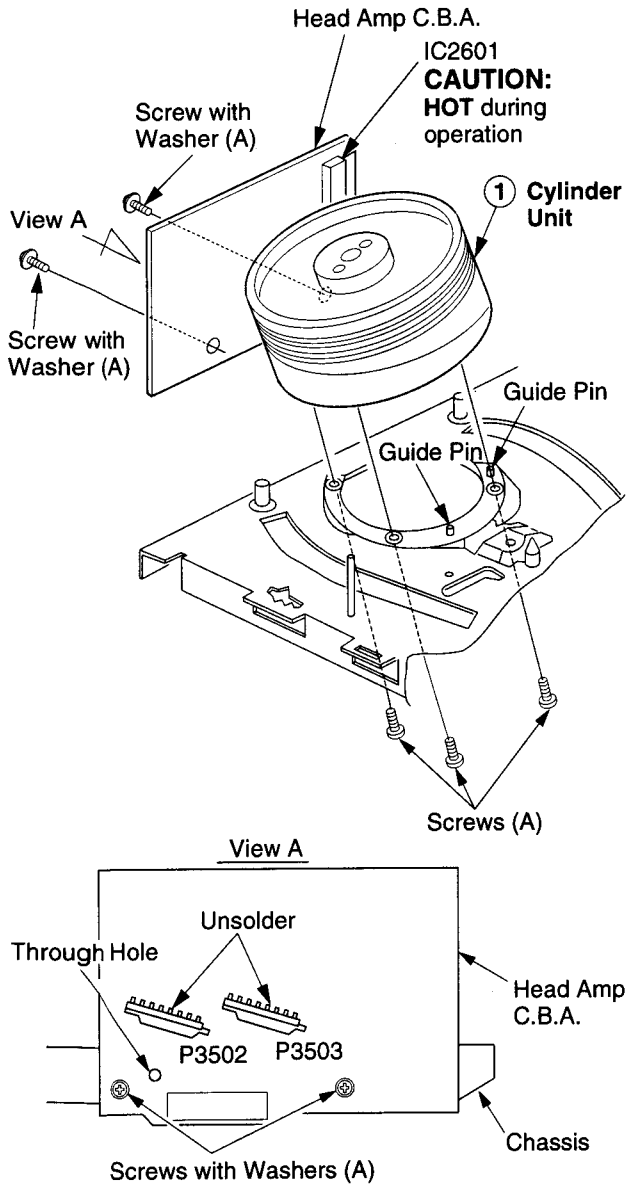

Fig. J2-1

Reassembly Notes

1. Use extreme care when removing or replacing the Cylinder Unit. Do not touch the Video Heads during servicing.
2. **Installation of Cylinder Unit**
   1) Install the Cylinder Unit so that the 2 holes on the lower surface of the Cylinder Unit fit over the 2 Guide Pins on the Cylinder Base and loosely secure it with 3 Screws (A).
   2) Install the Head Amp C.B.A. so that the hole on the Head Amp C.B.A. lines up with the hole on the chassis and secure it with 2 Screws with Washers (A).
   3) Position the Cylinder Unit so that foil patterns of connectors (P3502 and P3503) and Head Amp C.B.A. are aligned, and tighten 3 Screws (A).
   4) Solder connectors (P3502 and P3503).
3. **Adjustment of Grounding Plate Unit**
   1) After installing, make sure that the Grounding Plate Unit, on the bottom side of mechanism chassis, is positioned on the right side of the Cylinder shaft so that the center line of the plate is just less than 1.0 mm measured from the center of the Cylinder shaft.
   If required, adjust the plate position by loosening Black Screw (A).
   Never install the Grounding Plate Unit on the left side of the Cylinder shaft.
   Incorrect positioning will cause cylinder buzz.

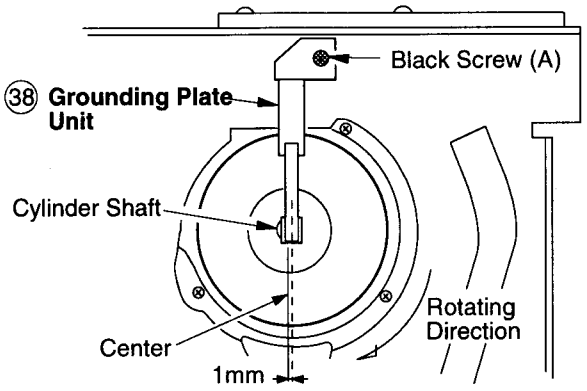

Fig. J2-2

   2) After installing, perform the "Tape Interchangeability Adjustment/Confirmation Procedures."

Upper Cylinder Unit

Disassembly Procedure

1. Remove 2 Screws with Washers (B).
2. Carefully lift the Upper Cylinder Unit from the shaft.

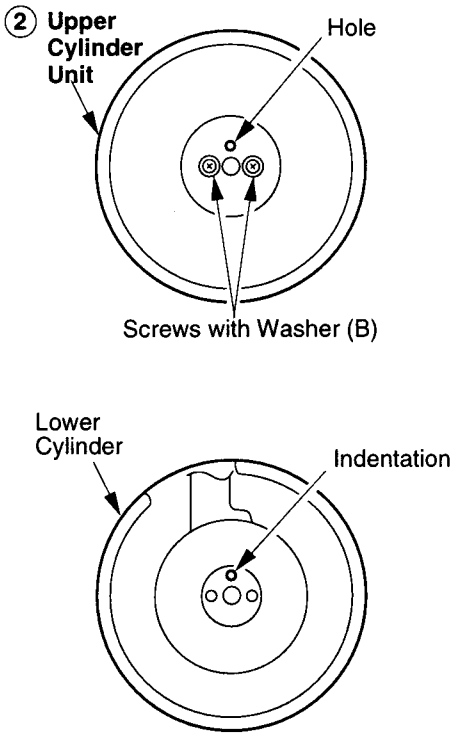

Fig. J3

Note:
Use extreme care when removing or replacing the Upper Cylinder Unit. Do not touch the Video Heads during servicing.

Reassembly Notes

1. Use extreme care when removing or replacing the Cylinder Unit. Do not touch the Video Heads during servicing.
2. **Alignment of Upper Cylinder Unit**
   1) When installing, make sure that the hole on the Upper Cylinder is aligned with the indentation on the Lower Cylinder.
   2) After installing, perform the "Tape Interchangeability Adjustment/Confirmation Procedures."

Opener Piece, Pinch Arm Unit, Motor Block Ass'y, and Audio Control Head Unit

Disassembly Procedure

1. Remove the Opener Piece by pulling it upward while releasing 2 Locking Tabs (A).
2. Pull up on the Pinch Arm Unit.
3. Release 3 Locking Tabs (B) and remove Screw with Washer (C). Then, remove the Motor Block Ass'y and Audio Control Head Unit.

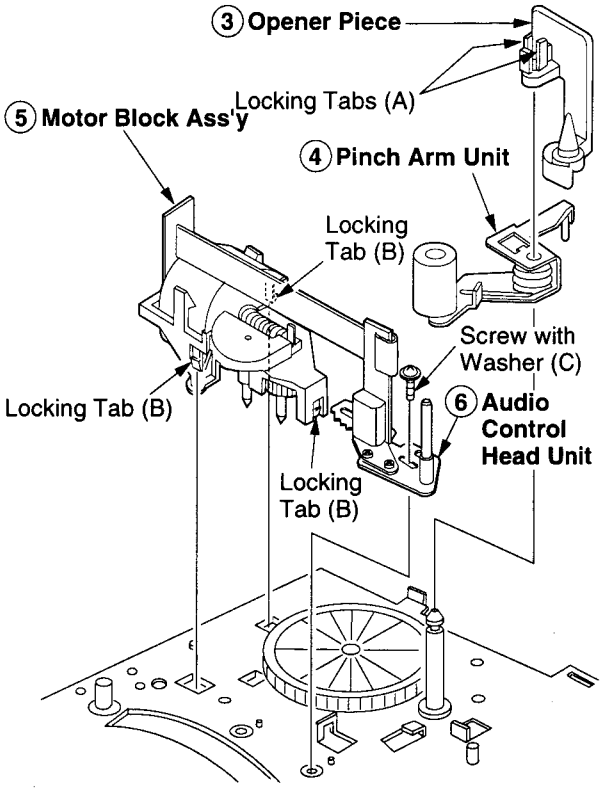

Fig. J4

Reassembly Notes

1. **Installation of Audio Control Head Unit**
   1) Install the Audio Control Head Unit before Motor Block Ass'y.
   2) After installing, perform the "Tape Interchangeability Adjustment/Confirmation Procedures."

Main Cam Gear and Drive Rack Arm

Disassembly Procedure

1. Remove the Main Cam Push Nut. (Refer to Note.)
2. Pull up on the Main Cam Gear.
3. Turn the Drive Rack Arm fully counterclockwise as shown.
4. Pull up on the Drive Rack Arm.

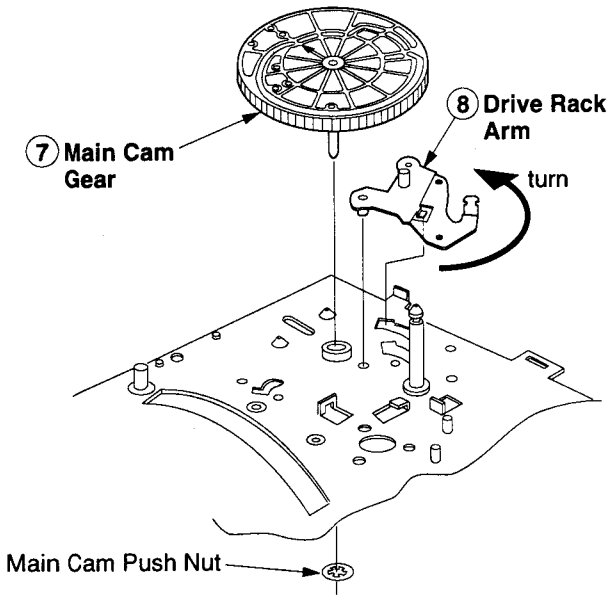

Fig. J5-1

Note:
When removing the Main Cam Push Nut, use a screwdriver etc.

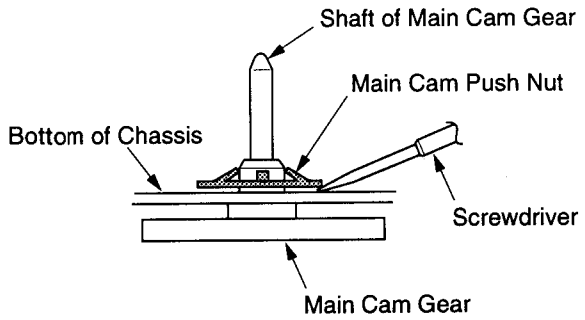

Fig. J5-2

Reassembly Notes

1. **Alignment of Main Cam Gear and Drive Rack Arm**
   1) Install the Drive Rack Arm so that the hole (A) is aligned with the hole on chassis as shown (Through hole (A)).
   2) Install the Main Cam Gear so that the 2 holes (B) marked "E" are aligned with the hole on chassis as shown (Through hole (B)). ("E" indicates the EJECT position.)

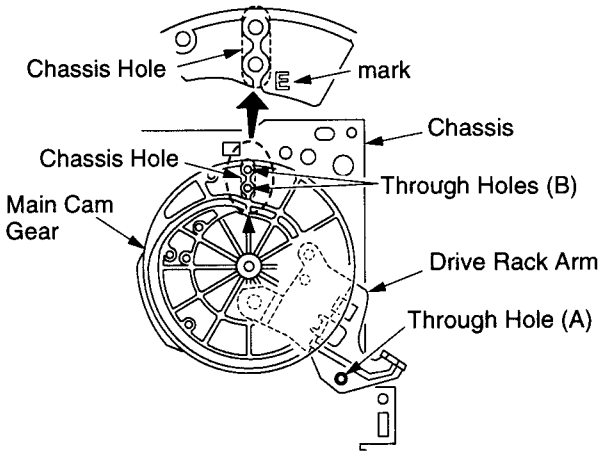

Fig. J5-3

2. **Installation of Main Cam Gear and Main Cam Push Nut**
   1) Position the chassis upside down placing a Support under the Main Cam Gear.
   Install the Main Cam Push Nut with Needlenose Pliers etc. so that it is flush with the chassis.

   There may be some slight scratches on the Shaft of Main Cam Gear, when removing the Main Cam Gear. In case that the Main Cam Gear can be installed securely without tottering, it is fine to use the one. If any tottering, replace a new one.

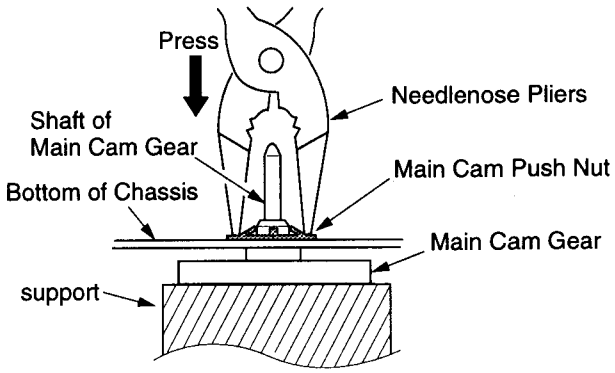

Fig. J5-4

3. Main Cam Push Nut is not reusable. If removed, install a new one.

Main Lever

Disassembly Procedure

1. Release 2 Locking Tabs (C) and Locking Tab (D). Then, remove the Main Lever.

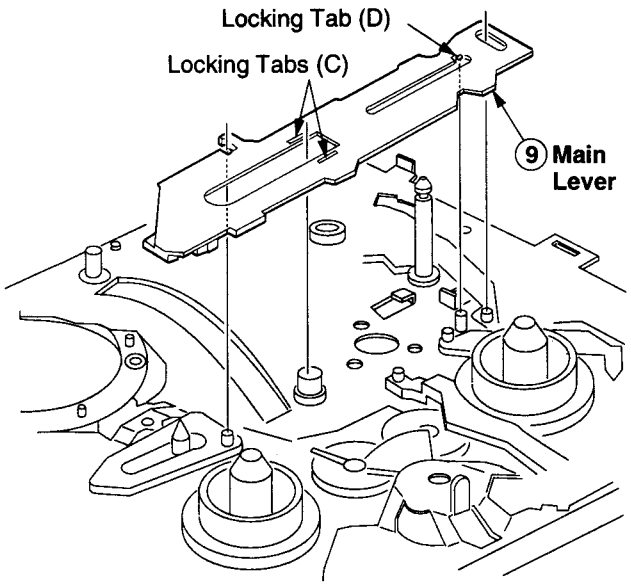

Fig. J6-1

Reassembly Notes

1. **Confirmation of Main Lever**
   1) Confirm that bosses and shafts are set properly after installation of Main Lever.

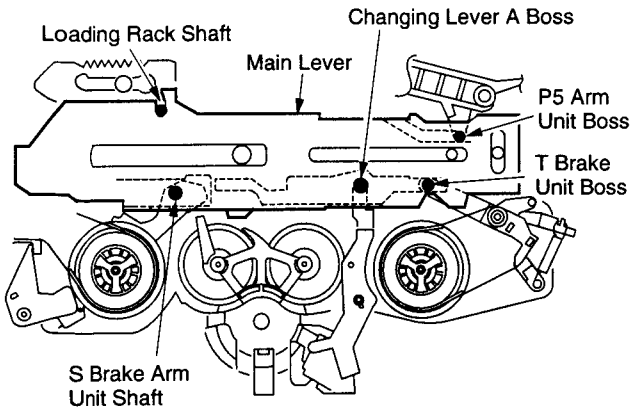

Fig. J6-2

P5 Arm Unit and Main Lever Drive Arm

Disassembly Procedure

1. Pull up on the P5 Arm Unit.
2. Turn the Main Lever Drive Arm fully counterclockwise as shown.
3. Pull up on the Main Lever Drive Arm.

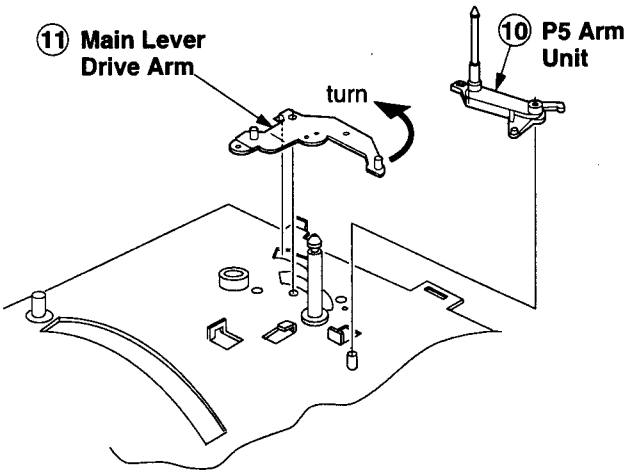

Fig. J7-1

Reassembly Notes

1. **Alignment of Main Lever Drive Arm**
   1) Install the Main Lever Drive Arm so that the hole (C) is aligned with the hole on the Chassis as shown (Through hole (C)).

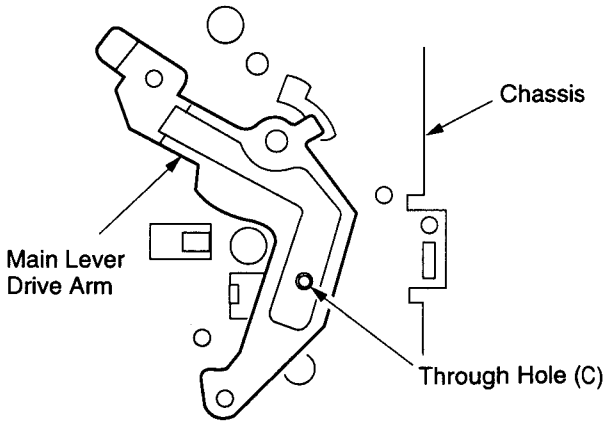

Fig. J7-2

T Brake Unit, Changing Lever A, and T Reel Table

Disassembly Procedure

1. Remove the T Brake Unit while releasing Locking Tab (E) located under the chassis.
2. Remove Cut Washer (A). Then, pull up on the Changing Lever A and remove.
3. Pull up on the T Reel Table.

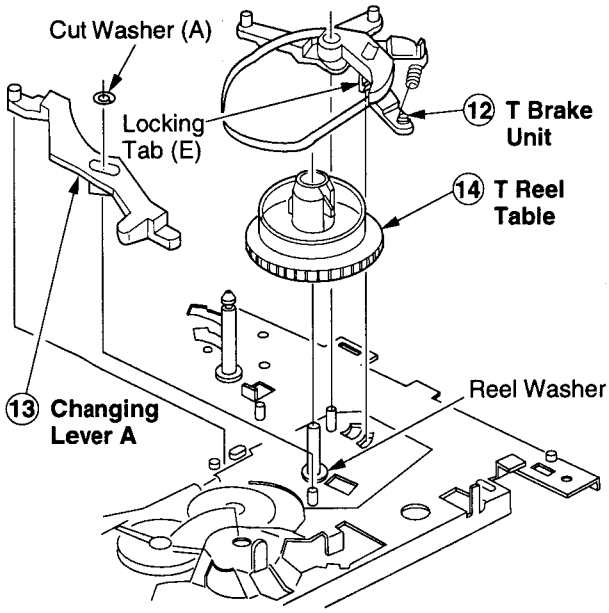

Fig. J8-1

Reassembly Notes

1. **How to distinguish between S Reel Table and T Reel Table**

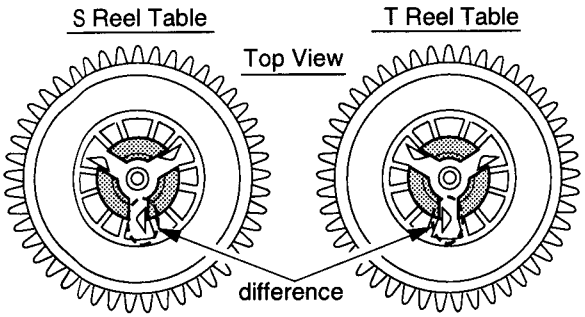

Fig. J8-2

2. **Adjustment of T Reel Table**
   1) After installing, perform the "Reel Table Height Adjustment Procedures."
3. Be careful not to lose the Reel Washer under the T Reel Table.
4. Cut Washer (A) is not reusable. If removed, install a new one.

Full Erase Head, Tension Arm Unit, S Spring Arm, and S Reel Table

Disassembly Procedure

1. Turn the Full Erase Head fully counterclockwise as shown. Then remove it.
2. Unhook Spring (A).
3. Remove the Tension Arm Unit by pulling it up while releasing 2 Locking Tabs (F).
4. Remove the S Spring Arm while releasing Locking Tab (G).
5. Pull up on the S Reel Table.

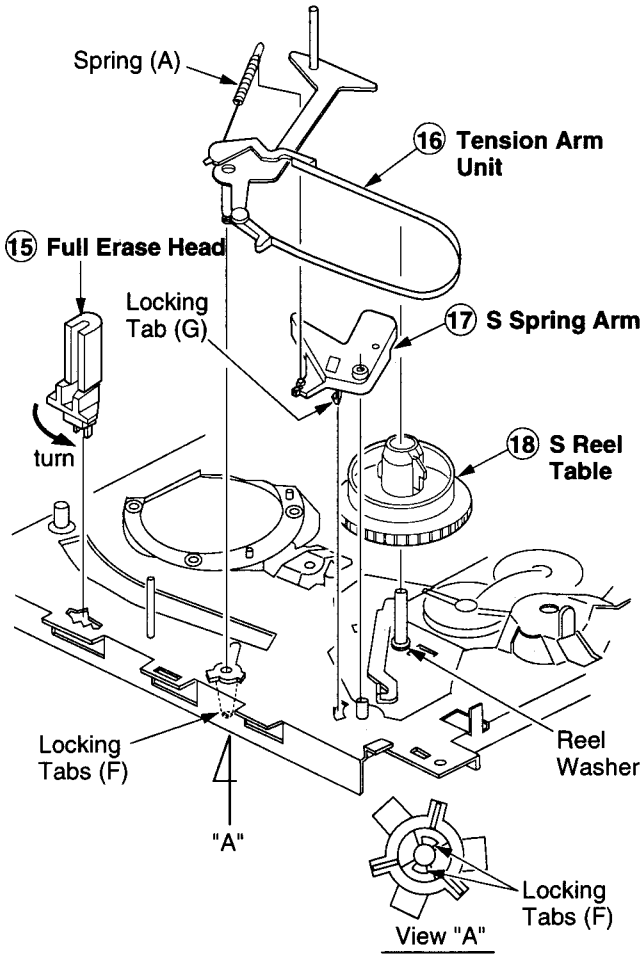

Fig. J9

Reassembly Notes

1. **Adjustment of S Reel Table**
   1) After installing, perform the "Reel Table Height Adjustment Procedures".
2. Be careful not to lose the Reel Washer under the S Reel Table.
3. **Adjustment of Tension Arm Unit**
   1) After installing, perform the "Tension Post Adjustment Procedures."

S Brake Arm Unit, Main Lever Guide, Loading Post Base -S, and Loading Post Base -T Unit

Disassembly Procedure

1. Remove the S Brake Arm Unit while releasing 2 Locking Tabs (H).
2. Remove the Main Lever Guide while releasing Locking Tab (I).
3. Slide the Loading Post Base -S and T Units to the end of the guide slots to remove.

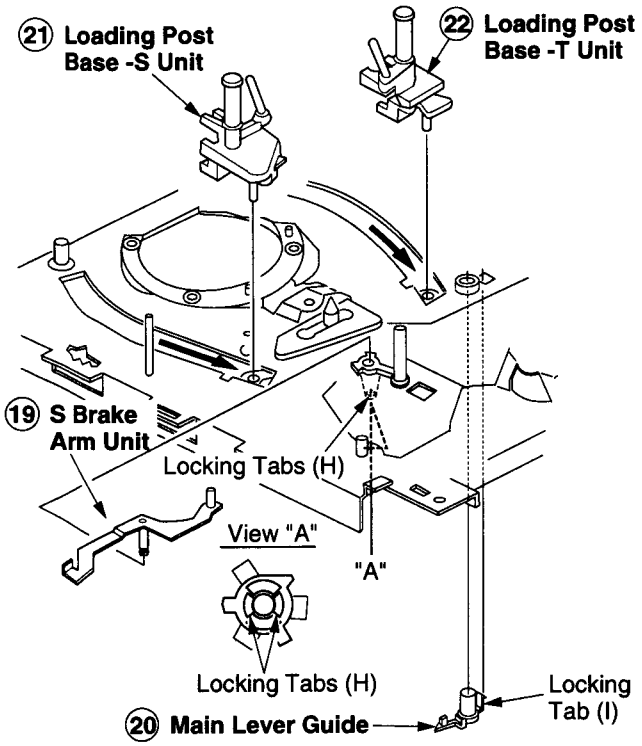

Fig. J10

Reassembly Notes

1. **Adjustment of Loading Post Base -S Unit and Loading Post Base -T Unit**
   1) After installing, perform the "P2 and P3 Post Height Adjustment Procedures" and "Tape Interchangeability Adjustment/Confirmation Procedures."

Capstan Rotor Unit, Capstan Holder Unit, and SS Brake Arm Unit

Disassembly Procedure

1. Remove the Capstan Belt.
2. Cut the Stopper with a cutter to remove.
3. Pull up on the Capstan Rotor Unit.
4. Remove 3 Screws (B). Then remove the Capstan Holder Unit.
5. Unhook Spring (B).
6. Turn the SS Brake Arm Unit so that the Tab (A) lines up with the niche. Then, remove the SS Brake Arm Unit.

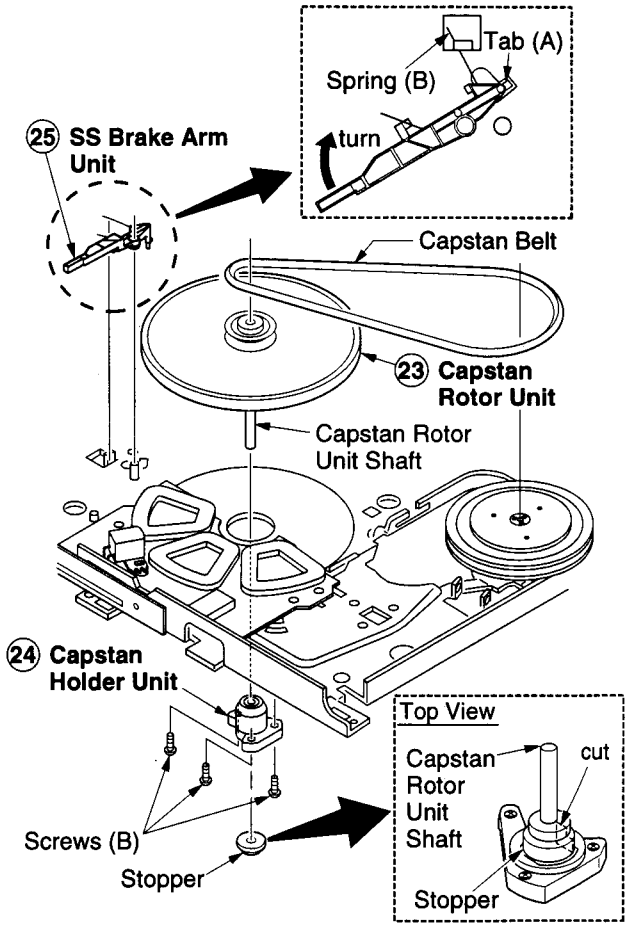

Fig. J11-1

Reassembly Notes

1. **Installation of Capstan Rotor Unit**
   1) Insert the Capstan Rotor Unit Shaft to the hole of the Capstan Holder Unit.
   2) Place a support under the Capstan Rotor Unit shaft. Install the Stopper. Be careful not to scratch the shaft or Capstan Holder Unit.
   3) Remove the support. Press the top end of the shaft down so that the Stopper is properly positioned. You should be able to move the shaft up and down slightly when properly positioned.

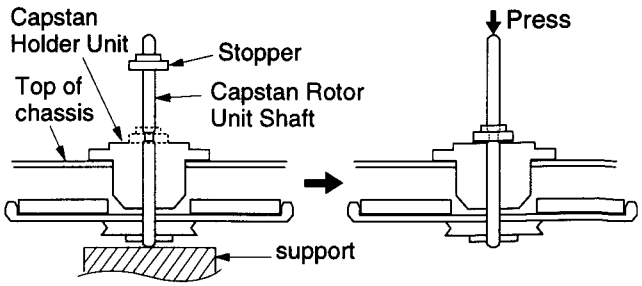

Fig. J11-2

2. **Capstan Rotor Kit**
   Capstan Rotor Unit, Capstan Holder Unit, and Stopper are supplied as a Capstan Rotor Kit only. (Kit No. VXPS0382K) They are not reusable. If removed, install a new one. Because even invisible scratches on the Shaft of Capstan Rotor Unit and the Capstan Holder Unit, made when cutting the Stopper, could cause unstable tape path running.

Junction C.B.A., Capstan Stator Unit, Sub Rotor, and PCB Holder

Disassembly Procedure

1. Remove 2 Screws (C).
2. Unsolder P2532 on the Junction C.B.A. Then, remove the Junction C.B.A.
3. Remove Screw (D) and 2 Screws with Washers (D), (E). Then, remove Capstan Stator Unit, Sub Rotor, and PCB Holder.

CAUTION:
When removing Capstan Stator Unit, avoid touching IC2501 on the Capstan Stator Unit because it is **HOT** during operation.

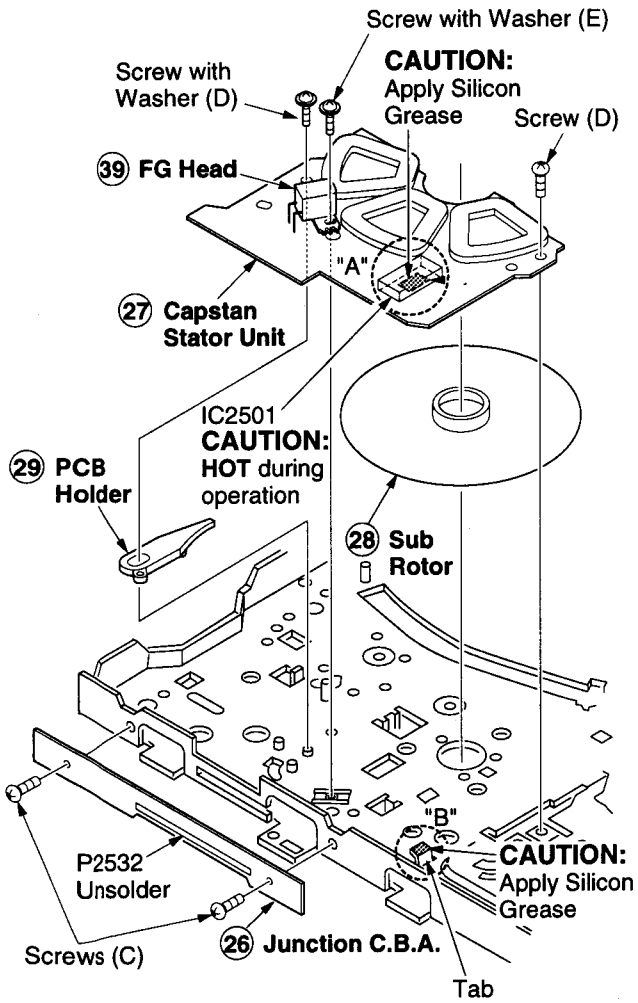

Fig. J12-1

Reassembly Notes

1. **Application of Sillicon Grease**

CAUTION

When installing the Capstan Stator Unit, be sure to apply Silicon Grease (VFK1301) as shown. Be careful not to touch other parts with greased portion to prevent grease depletion.

Silicon Grease Application

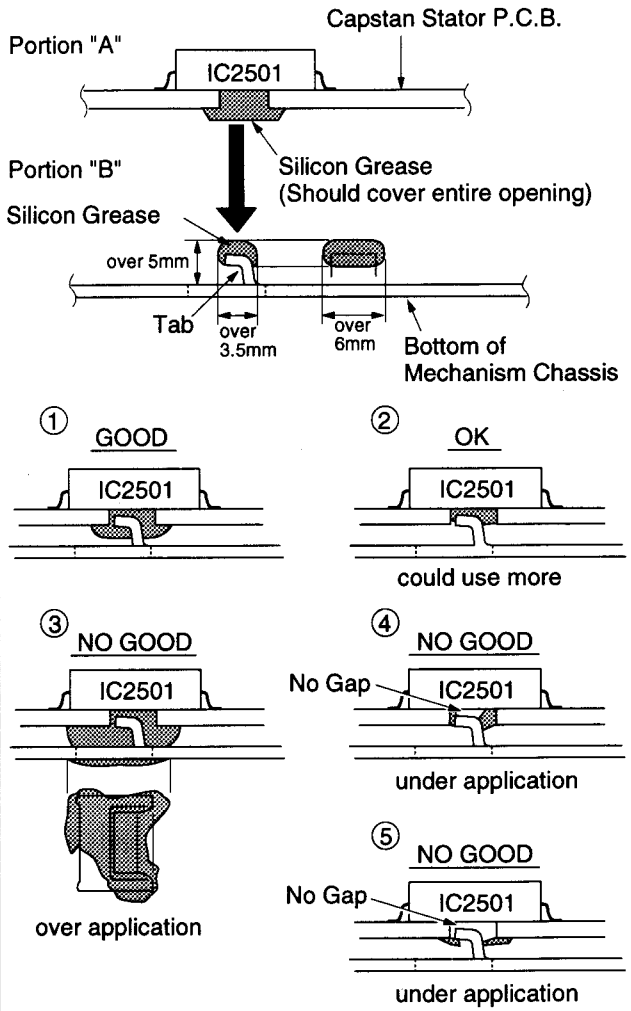

2. **Capstan Stator Kit**
   1) Capstan Stator Unit, Capstan Rotor Unit, Capstan Holder Unit, and Stopper are supplied as a Capstan Stator Kit (Kit No. VEMS0316K).
   Capstan Rotor Unit, Capstan Holder Unit, and Stopper are not reusable. If removed, install a new one.
   Because even invisible scratches on the Shaft of Capstan Rotor Unit and the Capstan Holder Unit, made when cutting the Stopper, could cause unstable tape path running.
3. **Adjustment of FG Head**
   1) After installing, perform the "FG Head gap Adjustment Procedures."

T Loading Arm Unit and S Loading Arm Unit

Disassembly Procedure

1. Remove the T Loading Arm Unit by pulling it up while releasing Locking Tab (J).
2. Pull up on the S Loading Arm Unit.

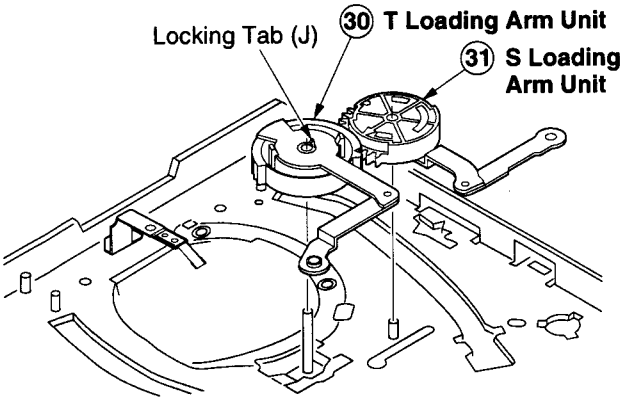

Fig. J13-1

Reassembly Notes

1. **Alignment of T Loading Arm Unit and S Loading Arm Unit**
   1) Slide the Loading Rack so that the holes on it and the holes on chassis line up properly.
   2) Install the S Loading Arm Unit onto the Chassis.
   3) Install the T Loading Arm Unit so that the triangle-shaped indent is aligned with the arrow on the S Loading Arm Unit as shown. Confirm that each of holes on the T Loading Arm Unit, Chassis, and the Loading Rack are through holes.

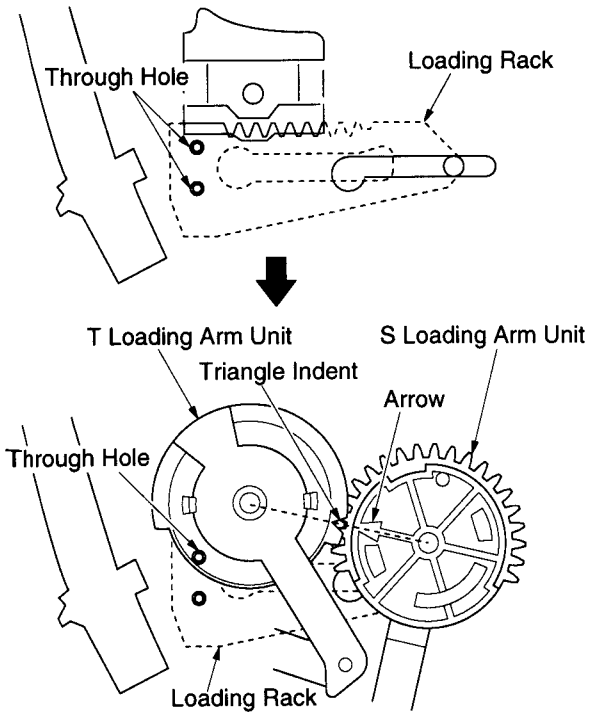

Fig. J13-2

Center Clutch Unit, Changing Gear Spring, Changing Gear, Changing Lever-B, and Idler Arm Unit

Disassembly Procedure

1. Remove Cut Washer (B). Then remove the Center Clutch Unit, Changing Gear Spring, and Changing Gear.
2. Remove Changing Lever-B while releasing 2 Locking Tabs (K).
3. Pull up on the Idler Arm Unit.

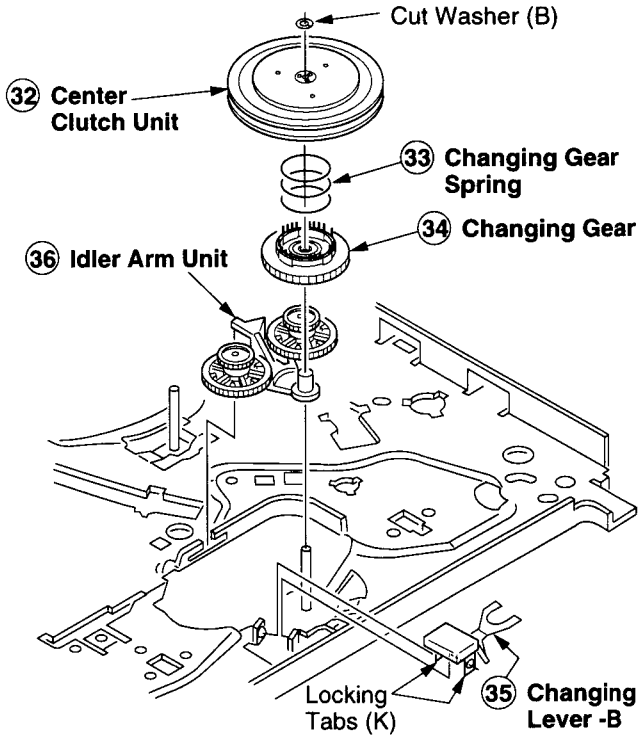

Fig. J14-1

Reassembly Notes

1. **Installation of Center Clutch Unit**
   1) Fit the Center Clutch Unit into the Changing Gear as shown.

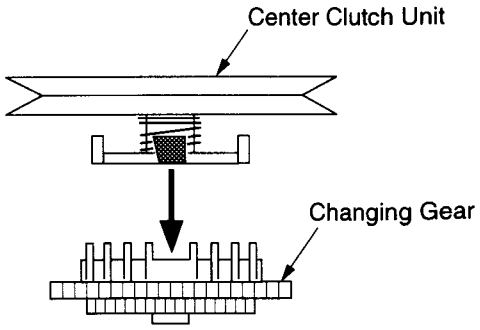

Fig. J14-2

2. Cut Washer (B) is not reusable. If removed, install a new one.

Loading Rack Unit

Disassembly Procedure

1. Slide the Loading Rack Unit as indicated by the arrow. Then, pull up on the Loading Rack Unit.

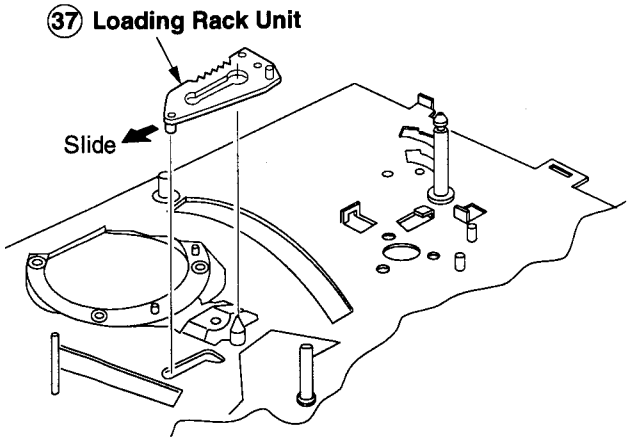

Fig. J15

DISASSEMBLY/ASSEMBLY PROCEDURES OF CASSETTE UP ASS'Y

Top Plate, Wiper Arm Unit, and Holder Unit

Disassembly Procedure

1. Remove Top Plate by releasing 2 Locking Tabs (A) on the left side and 2 Locking Tabs (B) on the right side of the Top Plate.
2. Remove Wiper Arm Unit by releasing 2 Locking Tabs (C). Then, remove the Holder Unit.

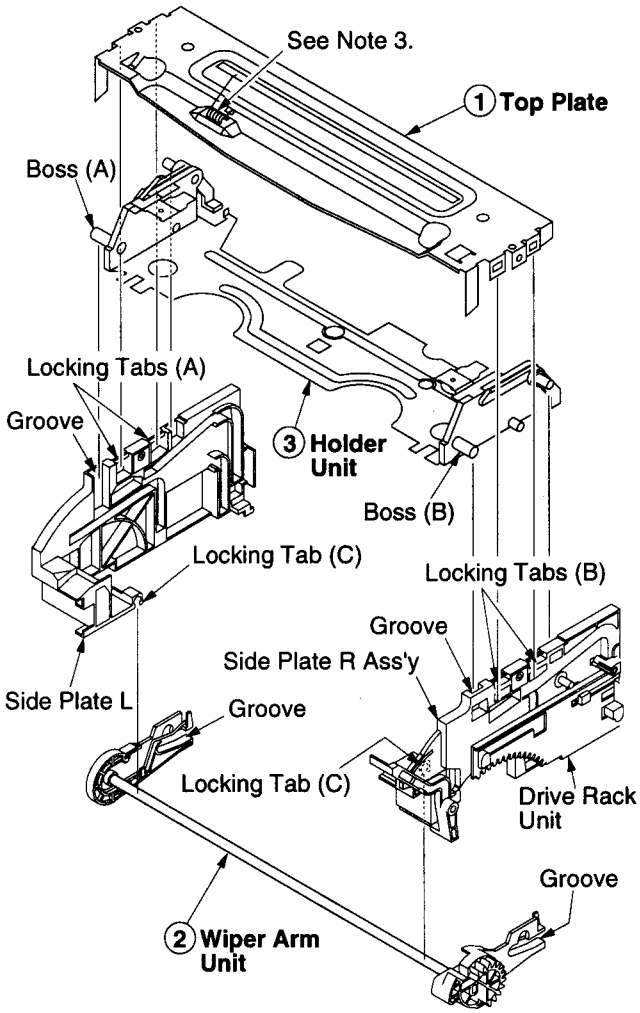

Fig. K1-1

Reassembly Notes

1. **Alignment of Wiper Arm Unit and Drive Rack Unit**
   1) Slide the Drive Rack Unit to the far right as indicated by the arrow.
   2) Install the Wiper Arm Unit so that the hole on the Wiper Arm Unit is aligned with the hole on the Drive Rack Unit.

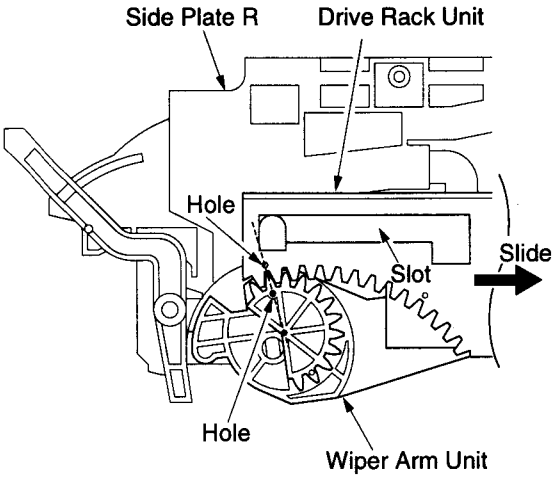

Fig. K1-2

2. **Installation of Holder Unit**
   1) Turn the Wiper Arm Unit so that the grooves on each end are aligned with the grooves on Side Plate L and R.
   2) Insert Holder Unit boss (A) and (B) into the grooves.
   3) Finally, in the EJECT Position, confirm that the protrudence on the Wiper Arm Unit is aligned with the indentation on the Drive Rack Unit.

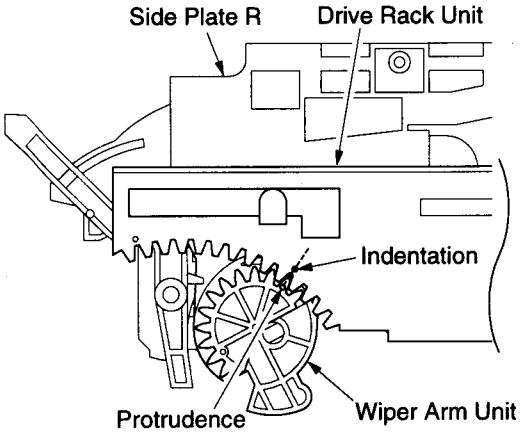

Fig. K1-3

3. As an ESD countermeasure, make sure the spring is in contact with Top Cover.

Sensor Cover, Opener Lever, and Drive Rack Unit

Disassembly Procedure

1. Remove the Sensor Cover by releasing Locking Tab (D).
2. Remove the Opener Lever by releasing Locking Tab (E). Then remove the Drive Rack Unit.

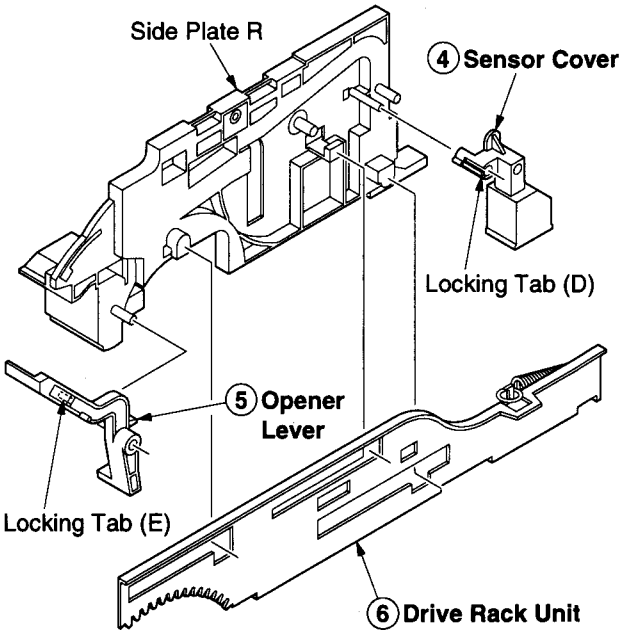

Fig. K2

ADJUSTMENT PROCEDURES

SERVICE FIXTURES AND TOOLS

VFMS0003H6 **VHS Alignment Tape**

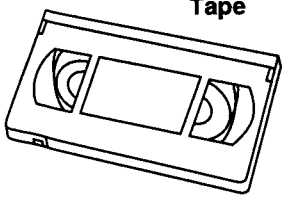

Video	Color Bar & Monoscope
Audio	6kHz(MONO)

Back Tension Meter (Made in USA., Purchase Locally)

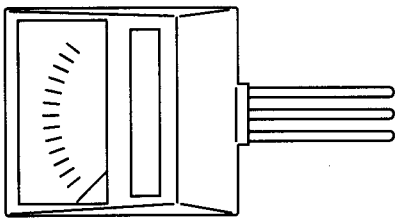

VFKS0009 **Reel Table Height Fixture**

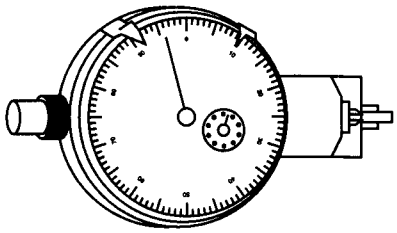

VFKS0010 **Post Adjustment Plate**

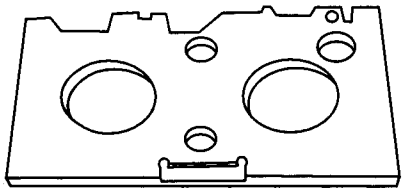

VFKS0081 **Grease**

VFK0329 **Post Adjustment Driver**

VFK1301 **Silicon Grease**

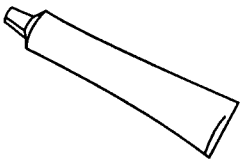

VFK27 **Head Cleaning Stick**

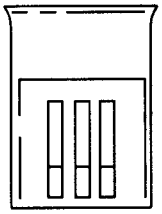

VFK0330 **H-Position Adjustment Driver**

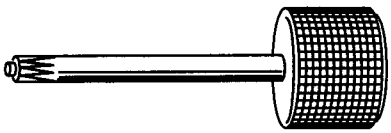

VUZS0002 **Extension Cable Kit**

Mode Select SW. Ass'y (VUVS0001)

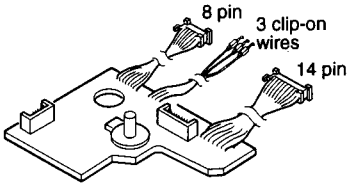

Extension Cable -1 (VUVS0002)

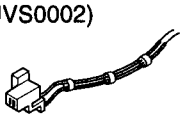

Extension Cable -2 (VUVS0004) for 4 Head Model

Extension Cable -2 (VUVS0005) for 2 Head Model

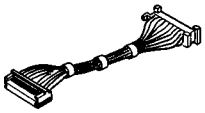

Extension Cable -2 (VUVS0003) for Hi-Fi Model

MECHANICAL ADJUSTMENT

CLEANING PROCEDURE FOR THE UPPER CYLINDER UNIT

1. While slowly turning the Upper Cylinder Unit counterclockwise by hand, gently rub the Video Heads with a Head Cleaning Stick (VFK27) moistened with Ethanol. When using a Cleaning Cassette, make sure to use "DRY" type only and be aware that excessive use can shorten head life.

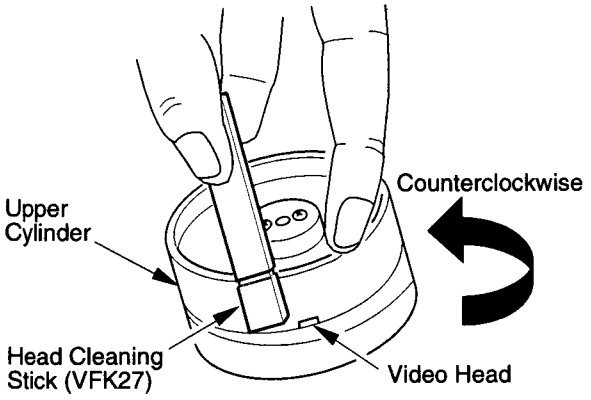

Fig. M1

Note:

1) Do not rub vertically or apply excess pressure to the Video Heads.
   Do not turn the Upper Cylinder Unit clockwise while cleaning.
2) After cleaning, use a Dry Head Cleaning Stick (VFK27) to remove any Ethanol remaining on the cylinder tape path. Otherwise, tape damage will occur.

ADJUSTMENT PROCEDURES

TENSION POST ADJUSTMENT

Purpose:
To maintain a constant tape tension so that the tape runs with stability by performing preliminary adjustment.

Symptom of Misadjustment:
1) If the adjusted value is below the specification, the tape tension is not sufficient, thus causing a tape slack.
2) If the adjusted value is above the specification, the tape tension is too high, thus causing tape damage.

Equipment Required:
2 mm Hex. Wrench ..... (Purchase Locally)

1. Remove the Cassette Up Ass'y.
2. Plug the AC plug into an AC outlet.
3. Place the unit in the Service Mode. Refer to "Service Mode" in the "Service Notes" section of this manual.
   The power comes on and the unit goes into the PLAY Mode.
4. Using a (2 mm) Hex. Wrench, adjust the nut on the Tension Adjust Piece (counterclockwise only) so that there is a space of 1 mm between the left edge of the P1 Post and the right edge of the Tension Post. Make sure that the center of the Hex. Wrench hole is within Area "A".
5. After adjustment, remove the Hex. Wrench.
6. Press the STOP/EJECT button to place the unit in the EJECT Mode.
7. Release the unit from the Service Mode. Refer to "Service Mode" in the "Service Notes" section of this manual.

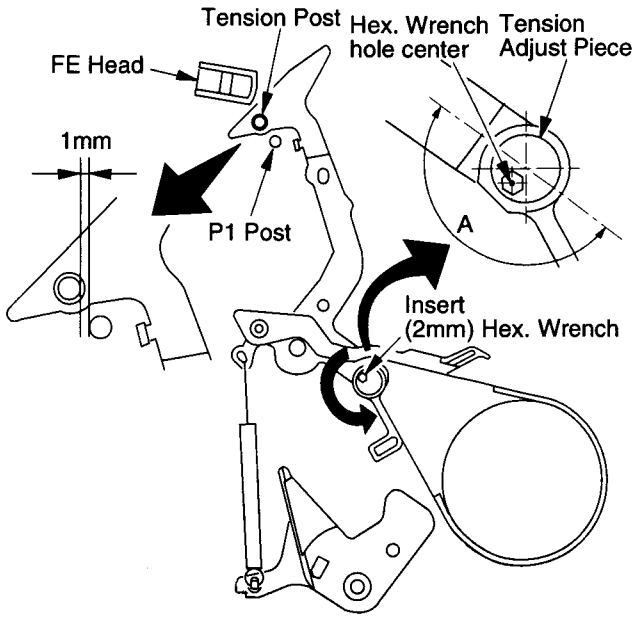

Fig. M2

BACK TENSION CONFIRMATION

Purpose:
To fine adjust the Back Tension so that the tape runs smoothly with a constant tension.

Symptom of Misadjustment:
1) If the tape tension is less than the specified value, the tape cannot come into proper contact with the Video Heads, resulting in poor picture playback.
2) If the tape tension is too high, the tape will soon be damaged.

Measurement Procedure

Equipment Required:
Back Tension Meter (Made in U.S.A., Purchase Locally)
VHS Cassette Tape (120-Minute Tape)

Specification ..... 25 +/- 2.5g

1. Play back a T120 cassette tape from the beginning for approx. 10 to 20 seconds to stabilize tape movement.
2. Insert a Tension Meter into tape path and measure the back tension.
3. If the reading is out of specification, make sure that there is no dust or foreign material between the Tension Band of Tension Arm Unit and the Reel Table.
   If cleaning does not correct the tension measurement, replace the Tension Spring and the Tension Arm Unit.

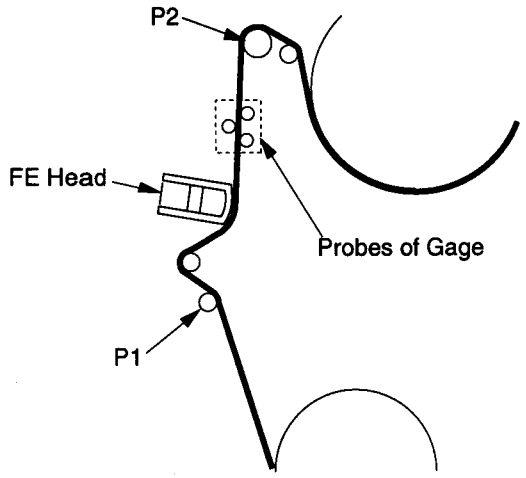

Fig. M3-1

Note:
1) Be sure that the three probes of the meter are all in solid contact with the tape, but not touching any other parts of the mechanism.
2) It is recommended that measurements be repeated at least three (3) times because the tension meter is very sensitive to external vibrations.

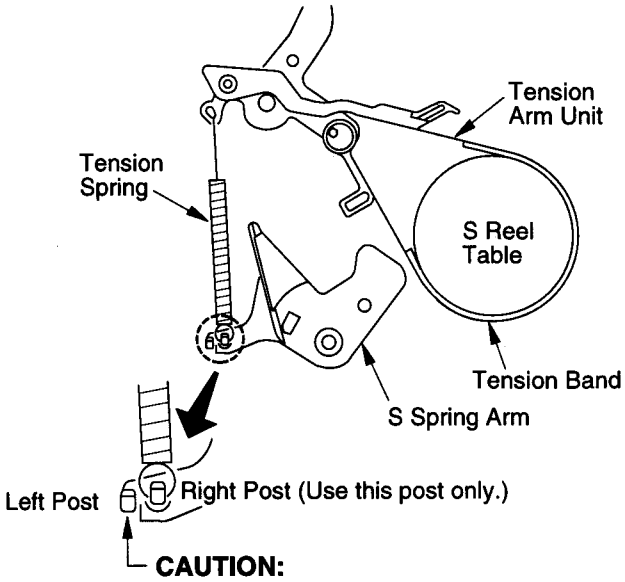

CAUTION:
The Left Post will be deleted on running change basis.
DO NOT attach the Spring to the Left Post.

Fig. M3-2

REEL TABLE HEIGHT ADJUSTMENT

Purpose:
To align the height of Supply and Take-Up Reel Tables properly.

Symptom of Misadjustment:
If the height of the Reel Table is not properly aligned, the tape will eventually be damaged.

Equipment Required:
Post Adjustment Plate ..... (VFKS0010)
Reel Table Height Fixture ..... (VFKS0009)

Specification ..... 0 +/- 0.2mm

1. Remove the Cassette Up Ass'y.
2. Position the Post Adjustment Plate over the reels.
3. Place the reel table height fixture on the Post Adjustment Plate so that the foot of the fixture sits in the cutout portion of the Post Adjustment Plate. Then zero the fixture.

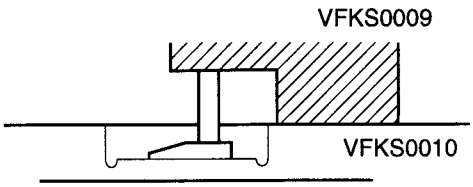

Fig. M4-1

4. Measure to the top edge of each reel table. The height should be 0 +/- 0.2 mm. If the height is not within the specification, add or remove Reel Washers (under the reel table) as necessary.

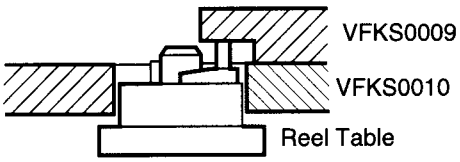

Fig. M4-2

Note:
Reel Washers are available in one size (0.25 mm) only.

FG HEAD GAP ADJUSTMENT

Purpose:
To properly pick up the FG Signal.

Symptom of Misadjustment:
If the FG Signal is not properly picked up, Servo Operation cannot be achieved.

Equipment Required:
Oscilloscope

Specification ..... 0.13 +/- 0.02mm

1. Remove the VCR Chassis Unit and then place it upside down.
2. Remove the Main C.B.A.
3. Slightly loosen Black Screw (A). Then set the Screwdriver (#1 or #2 Phillips Driver) into the Hole (A). Turn the screwdriver counterclockwise until the FG Head touches the rotor. Then turn it slightly clockwise to the clearance as specified.
4. Tighten Black Screw (A).
5. Reinstall the Main C.B.A.

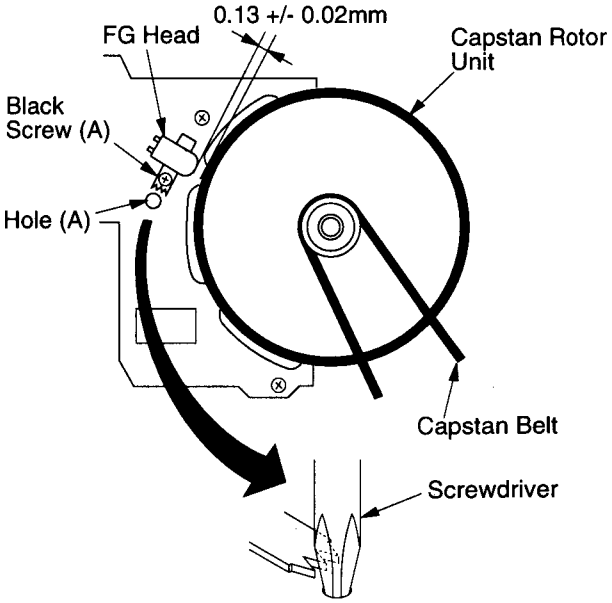

Fig. M5

Note:
Do not touch the outside circumference of the rotor surface with any tool and keep magnetic material away from the rotor magnet (especially metal particles).

Confirmation of Signal Level
1) Supply a Video Signal to the Video Input Jack.
2) Insert a cassette tape and place the unit in SLP recording mode.
3) Connect the oscilloscope to Pin 7 of P2502 on the Capstan Stator Unit.
Confirm that the signal level is greater than 10mVp-p.

P2 AND P3 POST HEIGHT ADJUSTMENT (PRELIMINARY ADJUSTMENT)

Purpose:
To properly align the position of the tape with the Cylinder Lead so that the tape runs with stability.

Symptom of Misadjustment:
1) Since the Envelope Waveform Signal cannot be tracked properly, the Playback picture will be poor.
2) Since the tape does not run smoothly, the tape will eventually be damaged.
3) Tape interchangeability is poor.

Equipment Required:
Post Adjustment Plate ..... (VFKS0010)
Reel Table Height Fixture ..... (VFKS0009)
Post Adjustment Driver ..... (VFK0329)

1. Remove the Cassette Up Ass'y.
2. Position the Post Adjustment Plate over the reels.
3. Place the fixture on the Post Adjustment Plate and zero the fixture (DO NOT use the cut-out portion of the post adjustment plate.)

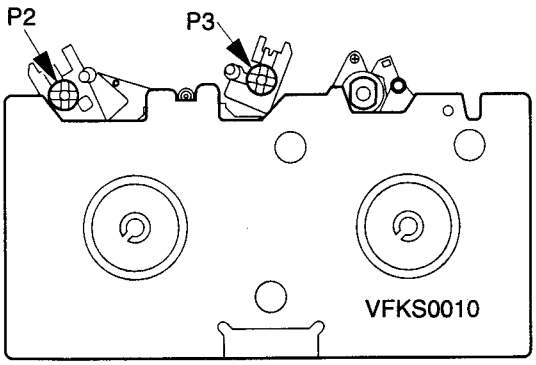

Fig. M6-1

4. Lower each post below the top edge of the Post Adjustment Plate. Then, raise each post until it contacts the foot of the Reel Table Height Fixture. For proper adjustment, the foot of that should be positioned as shown.

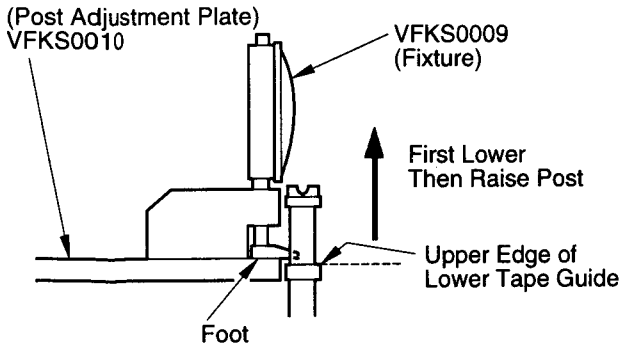

Fig. M6-2

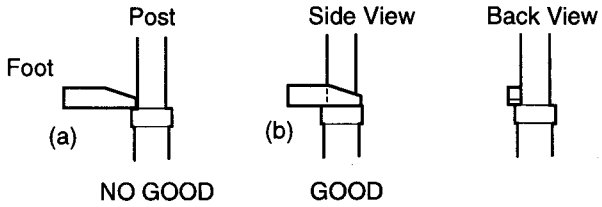

Fig. M6-3

CAUTION:
1) Overtightening P2 and P3 posts may cause the threads to strip.
2) Upon completion of this procedure, perform the "Envelope Output Adjustment/Confirmation Procedures."

TAPE INTERCHANGEABILITY ADJUSTMENT/CONFIRMATION (FINAL ADJUSTMENT)

Note:
To perform these adjustment/confirmation procedures, set the tracking to the neutral position.

Equipment Required:
Dual Trace Oscilloscope
VHS Alignment Tape ..... (VFMS0003H6)
Post Adjustment Driver ..... (VFK0329)
H-Position Adjustment Driver ..... (VFK0330)

1. ENVELOPE OUTPUT ADJUSTMENT/ CONFIRMATION

Purpose:
To achieve a satisfactory picture and secure precise tracking.

Symptom of Misadjustment:
If the envelope is output poorly, much noise will appear in the picture. Then the tracking will lose precision and the playback picture will be distorted by any slight variation of the tracking control circuit.

Equipment Required:
Post Adjustment Driver ..... (VFK0329)

1. Connect the oscilloscope to TP3002 on the Video Signal Process Section of the Main C.B.A. Use TP6205 as a trigger.
2. Place a jumper between TP6003 on the Video Signal Process Section and +5V(TP6009) on the System Control Section of the Main C.B.A. to defeat Auto Tracking.
3. Eject the tape and insert it again to access the Neutral Tracking position.
4. Play back the alignment tape.
5. With Post Adjust Driver, adjust P2 and P3 post height so that the envelope waveform (V_1/V-max. is 0.7 or more.) becomes as flat as possible (No envelope drop). If the envelope drop appears on the left-half of the waveform, adjust P2 post height. If the envelope drop appears on the right-half of the waveform, adjust P3 post height.

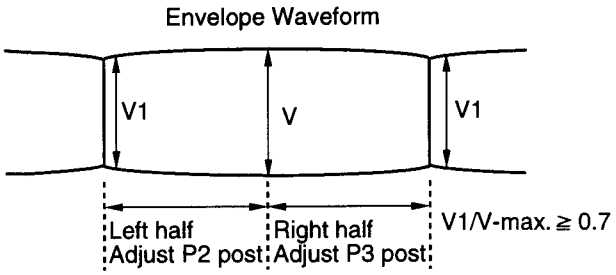

Fig. M7-1

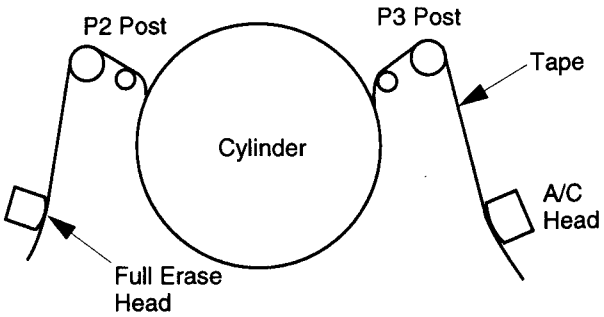

Fig. M7-2

Note:
To confirm adjustment, press the Tracking Control Up or Down button on remote control. Make sure that the envelope waveform remains flat. If not, readjust P2 and/or P3 post heights.

6. After adjustment, confirm that the tape travels without curling at P2 and P3 posts.
7. Remove the jumper after completing the adjustment procedure.

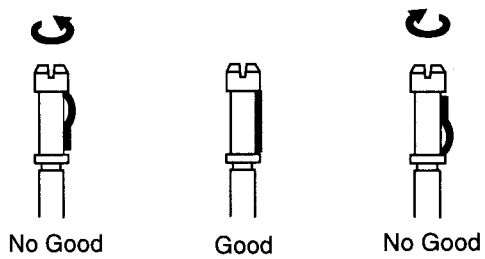

Fig. M7-3

Note:
Overtightening P2 and P3 posts may cause the threads to strip.

2. A/C HEAD TILT CONFIRMATION

Purpose:
To confirm that the tape runs smoothly. In particular, confirm that the tape properly picks up the Audio Signal at the upper part of the head and the Control Signal at the lower part of the head.

Symptom of Misadjustment:
If the tilt of the A/C Head is poorly adjusted, the tape will eventually be damaged. An intermittent Blue screen may be seen in Playback.

1. Play back a T120 cassette tape and check that the tape travels smoothly between the upper and lower guides of the P4 post.
2. If necessary, adjust Black Screw (B) clockwise until the tape begins to curl at the lower edge of the P4 post. Then adjust the screw counterclockwise until the curling is eliminated.

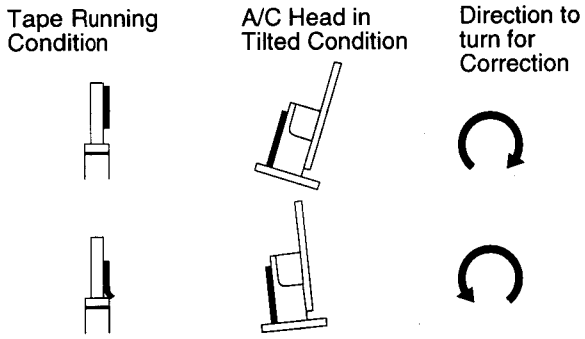

Fig. M8

3. A/C HEAD HEIGHT CONFIRMATION

The height of the A/C Head replacement part is preset at the factory.

Purpose:
To be sure the tape runs properly along the Control Head.

Symptom of Misadjustment:
If the control signal is not properly picked up, Servo Operation cannot be achieved. A Blue screen will be seen in Playback.

This confirmation is required when the A/C Head is replaced.

1. Play back a T120 cassette tape and check that the lower edge of the tape runs approximately 0.25 mm above the lower edge of the A/C Head.
2. If necessary, adjust Black Screws (A) and (B) clockwise to lower the tape or counterclockwise to raise.

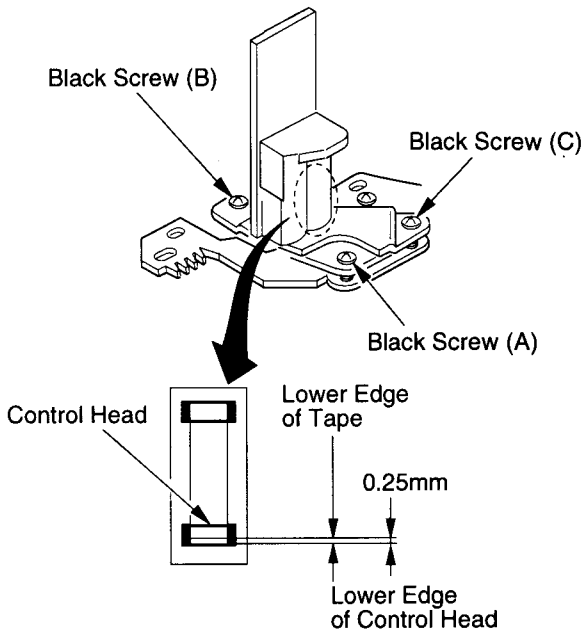

Fig. M9

4. A/C HEAD AZIMUTH ADJUSTMENT

Purpose:
To adjust the position and height of the A/C Head so that it meets the tape tracks properly.

Symptom of Misadjustment:
If the position of the A/C Head is not properly adjusted, the Audio S/N Ratio is poor.

1. Connect the oscilloscope to the audio output jack on the rear side of the deck.
2. Play back the 6kHz Monaural Audio portion of the alignment tape.
3. Adjust Black Screw (C) on the A/C Head base so that the output level is at maximum.

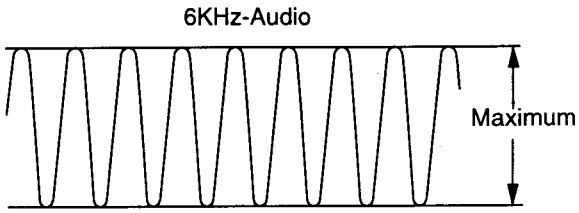

Fig. M10

4. Confirm the height of the A/C Head is proper. If not, readjust Black Screws (A) and (B).

5. A/C HEAD HORIZONTAL POSITION ADJUSTMENT

Purpose:
To adjust the Horizontal Position of the A/C Head.

Symptom of Misadjustment:
If the Horizontal Position of the A/C Head is not properly adjusted, a maximum envelope cannot be obtained at the Neutral Position of the Tracking Control Circuit.

Place a jumper between TP6003 on the Video Signal Process Section and +5V(TP6009) on the System Control Section of the Main C.B.A. to defeat Auto Tracking.

1. Eject the tape and insert it again to access the Neutral Tracking position. Connect the oscilloscope to TP3002 on the Video Signal Process Section of the Main C.B.A. Use TP6205 as a trigger.
2. Play back the alignment tape and confirm that the RF envelope appears.
3. If adjustment is required, loosen the Black Screw (D) and tighten it lightly. Set the H-Position Adjustment Driver into the Hole (A). Then slowly turn the fixture either clockwise or counterclockwise so that the envelope is at maximum.
4. Before finding the center of the maximum period of the envelope, rotate the fixture back and forth slightly to confirm the limits on either side of the maximum period.
5. Push the Tracking Control Up Button (on the Remote Control) several times (count the number of times pushed) until the maximum envelope is reduced to 1/2.
6. Reset the tracking to the neutral position by ejecting the tape and reinserting it. Push the Tracking Control Down Button (on the Remote Control) several times (count the number of times pushed) until the maximum envelope is reduced to 1/2.
7. If the number of pushing is not the same, then loosen the Black Screw (D) and set the H-Position Adjustment Driver into the Hole (A) to find the center point. Then repeat the above procedure to determine the center point.
8. Tighten Black Screw (D).
9. Remove the jumper between TP6003 and +5V(TP6009).

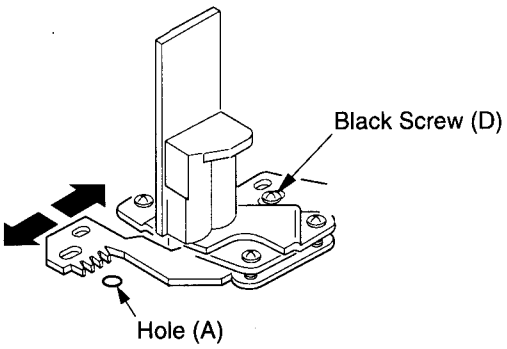

Fig. M11

Note:
Old type of H-Position Adjustment Driver (VFK0136) can be used for this adjustment.

ELECTRICAL ADJUSTMENT

TEST EQUIPMENT

To do all of these electrical adjustments, the following equipment is required.

1. Dual-Trace Oscilloscope
   Voltage Range : 0.001 to 50V/Div.
   Frequency Range : DC to 50MHz
   Probes : 10:1, 1:1
2. Color TV Receiver or Monitor
3. Plastic Tip Driver and Non-Metal Driver
4. Isolation Transformer (Variable)
5. VHS Alignment Tape (VFMS0003H6)
6. AC Millivolt Meter
   Voltage Range : 0 to 1Vrms.
7. MTS/SAP Signal Generator
   (TV Multi-Channel Sound Modulator (U.S.A.))

HOW TO READ THE ADJUSTMENT PROCEDURES

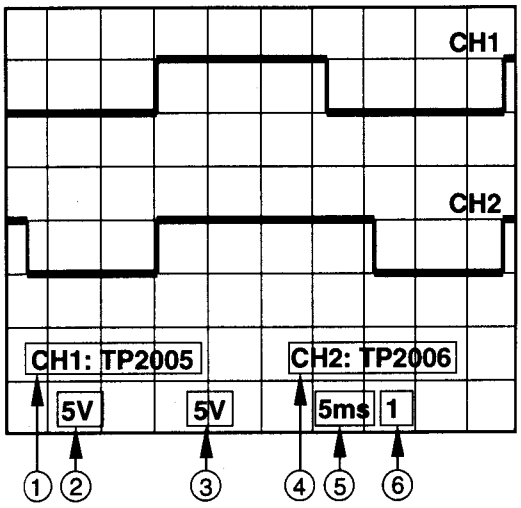

1. Connecting Point
3. Volts/DIV
5. Time/DIV

2. Volts/DIV
4. Connecting Point
6. Trigger Channel of the Scope
1 : CH1
2 : CH2

Fig. E1

PG SHIFTER ADJUSTMENT

Purpose:
Determine the Video Head Switching Point during Playback.

Symptom of Misadjustment:
May cause Head Switching Noise and/or Vertical Jitter.

Test Point : TP3001 (Main C.B.A.)
TP6205 (Main C.B.A.)
Adjustment : R6201 (Main C.B.A.)
Specification : T = 6 +/- 1H (0.38 +/- 0.06msec.)
Mode : SP Playback
Equipment : Oscilloscope

1. Connect the channel-1 scope probe to TP3001 and the channel-2 scope probe to TP6205. Trigger from channel-2.
2. Playback the VHS alignment tape and adjust the R6201 (PG SHIFTER) so that the leading edge of the head switching pulse is placed 6H +/- 1H (0.38 +/- 0.06msec.) before the start of the vertical sync pulse.

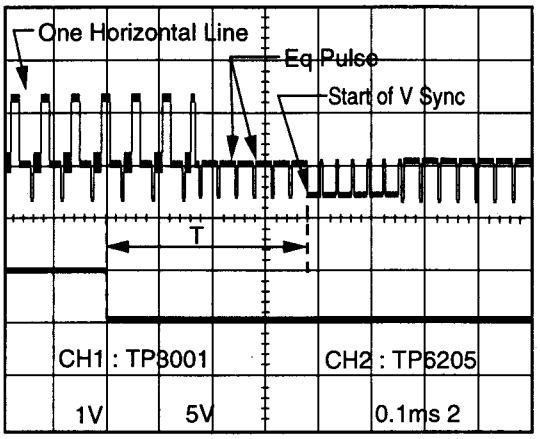

Fig. E2

INPUT LEVEL ADJUSTMENT
(Model : F, G, H)

Purpose:
To fix the output level of Tuner.

Symptom of Misadjustment:
The L and R channels of the STEREO signal will not be separated properly.
The L channel will contain part of the R channel signal or vice versa.

Test Point	**: Pin 4 of U4901**	**(Main C.B.A.)**
Adjustment	**: R7007**	**(Main C.B.A.)**
Specification	**: 245 +/- 8mVrms (693 +/- 23mVp-p)**	
Input	: Antenna Input Terminal MONO 300Hz +/- 5Hz 100% Modulating	
Mode	: STOP	
Equipment	: AC Millivolt Meter, MTS/SAP Signal Generator	

1. Connect the AC Millivolt Meter to pin 4 of U4901.
2. Connect the MTS/SAP Signal Generator to the RF Input on the VCR. Set the MTS/SAP Signal Generator as follows.
   MONO
   300Hz +/- 5Hz
   100% Modulating
3. Tune the VCR to the appropriate channel (same as that provided by the signal generator) and adjust the R7007 ((MPX) INPUT LEVEL) so that the voltage at pin 4 of U4901 is 245 +/- 8mVrms.

Note:
If the generator cannot produce 100% modulation, multiply the specification provided in step 3 by the modulation level used (available).

Example:
30% (Modulation) X 245 +/- 8mVrms
(Specification) = 73.5 +/- 2.4 mVrms (New Specification).

TEST POINTS AND CONTROL LOCATION

Main C.B.A. (A, E, H)

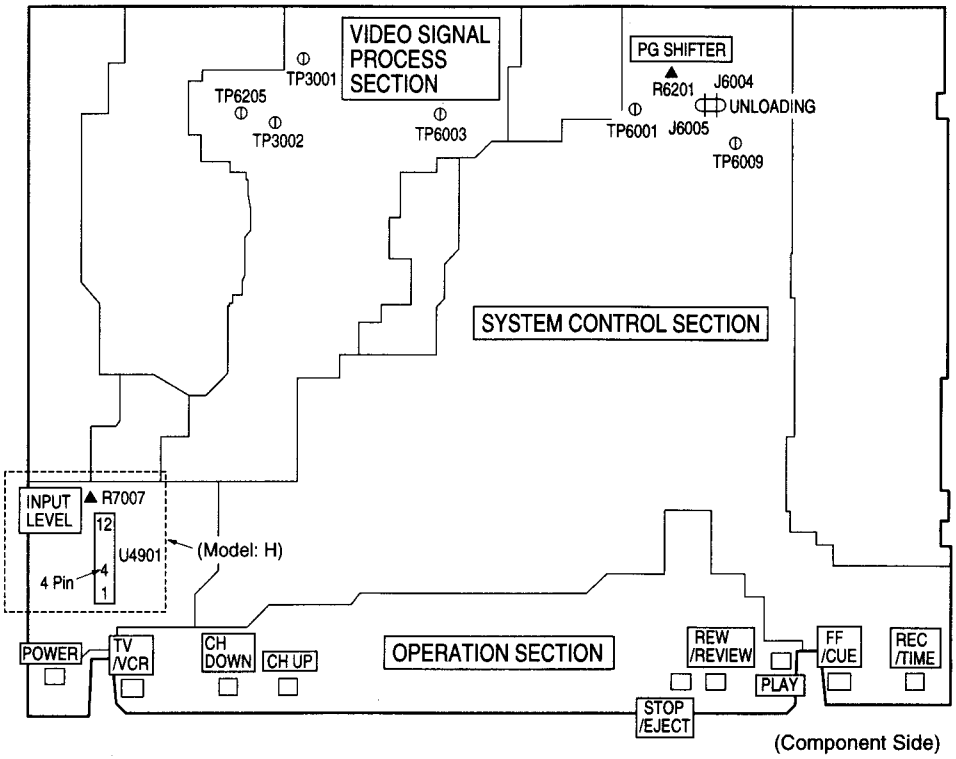

FUNCTION OF IMPORTANT TEST POINTS	
TP3001	Video Signal to Jack
TP3002	PB/REC Video envelope signal
TP6001	Service Test Point (inhibit sensors)
TP6003	defeat Auto tracking function (connect to +5V(TP6009)
TP6009	+5V
TP6205	Head SW.

Test Point Information

⦶ Test Point with a jumper wire across a hole in the P.C.B.

○ Test Point with no Test Pin.

Main C.B.A. (B, C, D, F, G)

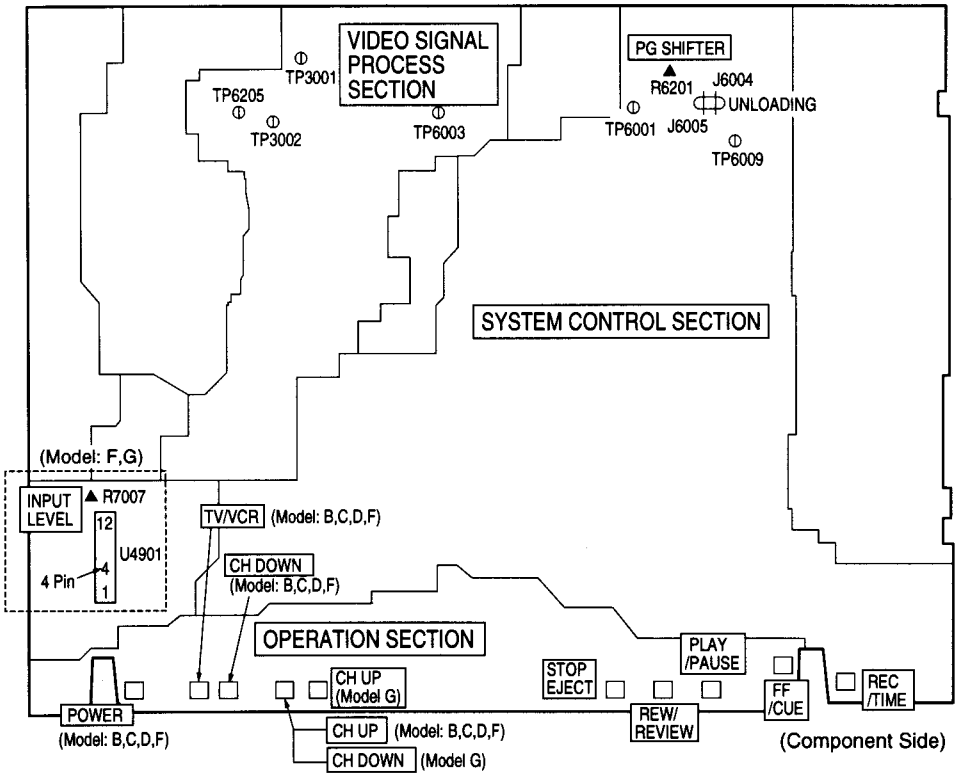

Operation C.B.A. (Model: G)

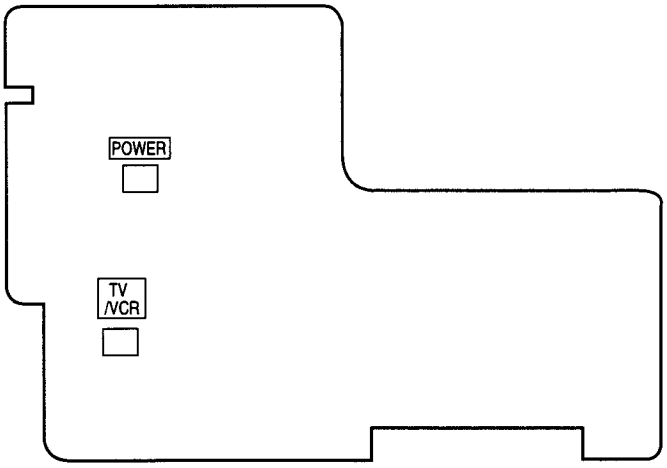

(Component Side)

— MEMO —

SCHEMATIC DIAGRAMS

SCHEMATIC DIAGRAM AND CIRCUIT BOARD LAYOUT NOTES

Important safety notice

Components identified by the sign ⚠ have special characteristics important for safety . When replacing any of these components. Use only the specified parts.

Replacement parts

1. Do not use the part number shown on this drawing for ordering. The correct part number is shown in the parts list, and may be slightly different or amended since this drawing was prepared.
2. To maintain original function and reliability of repaired units, use only original replacement parts which are listed with their part numbers in the parts list section of the service manual.
3. Parts different in shape or size may be used.
   However, only interchangeable parts will be supplied as service replacement parts.

Test point information

- ⦶ :Test point with a jumper wire across a hole in P.C.B.
- ▭→ :Test point with a component lead on the foil side.
- ⊘ :Test point with no test pin.
- ● :Test point with a test pin.

How to read Schematic and C.B.A. Diagrams

1. The Mark "■ " indicates leaded component.

Example: ■ R1002

2. Voltage Measurement

a. Color bar signal in SP mode.

b. ---:Unmeasurable or not necessary to measure.

3. Indication for Zener Voltage of Zener Diodes

The Zener Voltage of Zener Diodes are indicated as such on Schematic Diagrams.

Example:

(6.2V).....Zener Voltage

4. How to identify Connectors on Schematic Diagrams

Each connector is labeled with a Connector No. and Pin No. Indicating what it is connected to, in other words, its counter part.

Connections between large P.C.B.s and small circuit boards are illustrated on the large P.C.B. Schematics.

Use the interconnection schematic diagram to find the connection between associated connectors.

Example:

The connections between C.B.A.s are as shown below.

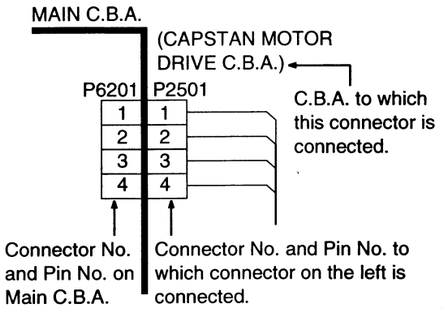

5. Parts enclosed in dashed lines marked "Z" are not used in any models included in this service manual.

Example:

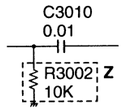

Comparison chart of models & marks used in Schematic and C.B.A. Diagrams

MODEL	MARK
VHQ720	A
PV-7400	B
PV-7401	C
PV-7401-K	D
VHQ740	E
PV-7450	F
PV-7451	G
VHQ760	H
Not used in any models	Z

Note : Refer to item 5 for mark "Z".

JUNCTION SCHEMATIC DIAGRAM

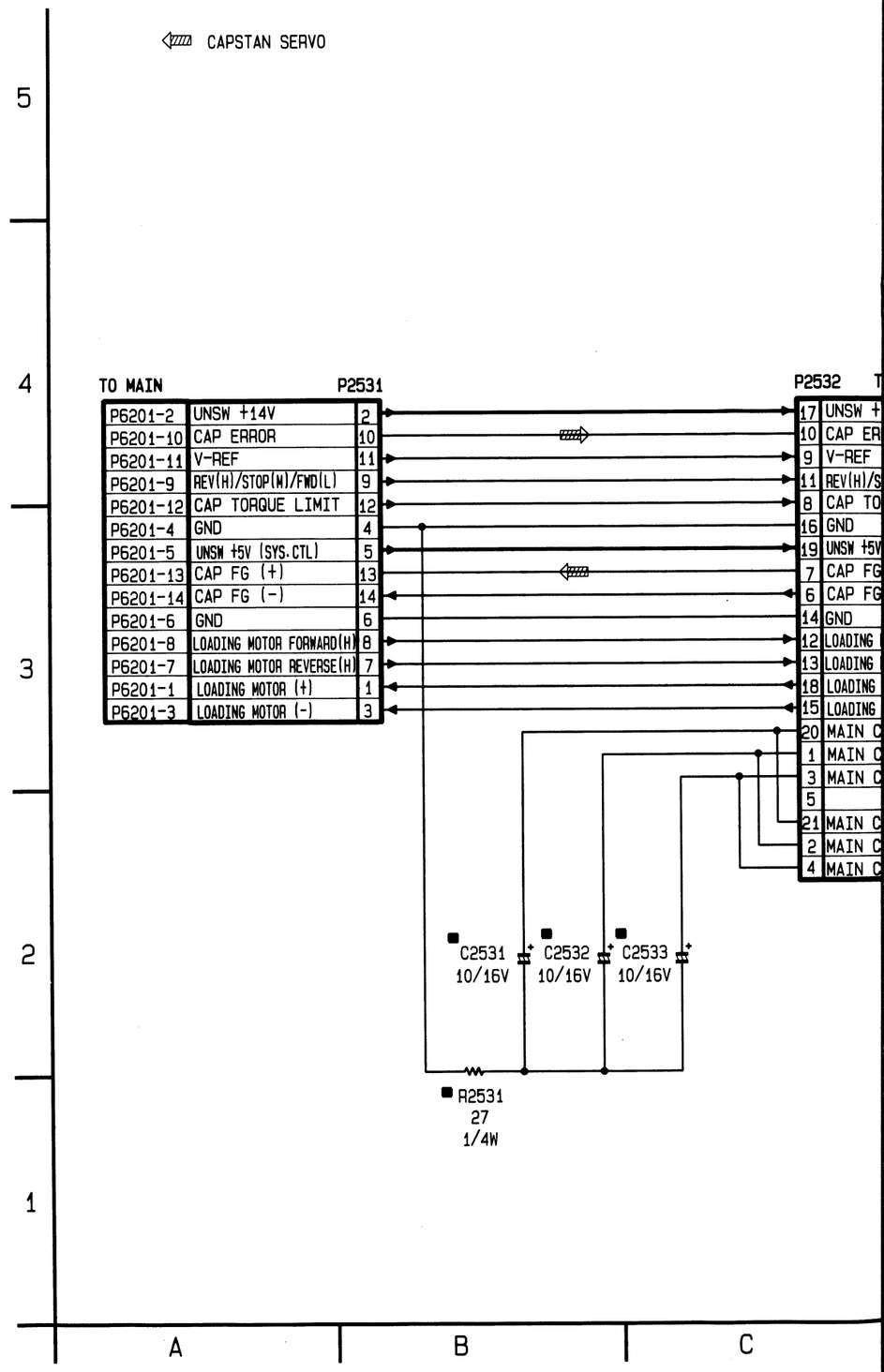

chematic Diagrams
nnector No. and Pin No.
other words, its counter

and small circuit boards
chematics.
c diagram to find the
nnectors.

s are as shown below.

TOR

C.B.A. to which
this connector is
connected.

and Pin No. to
r on the left is

marked "Z" are not
his service manual.

ks used in Schematic

JUNCTION SCHEMATIC DIAGRAM

NOTE:
FOR SCHEMATIC DIAGRAM AND CIRCUIT BOARD LAYOUT NOTES,
REFER TO BEGINNING OF SCHEMATIC SECTION.

NOTE:
CAPSTAN STATOR UNIT IS SUPPLIED AS A CAPSTAN STATOR KIT ONLY.

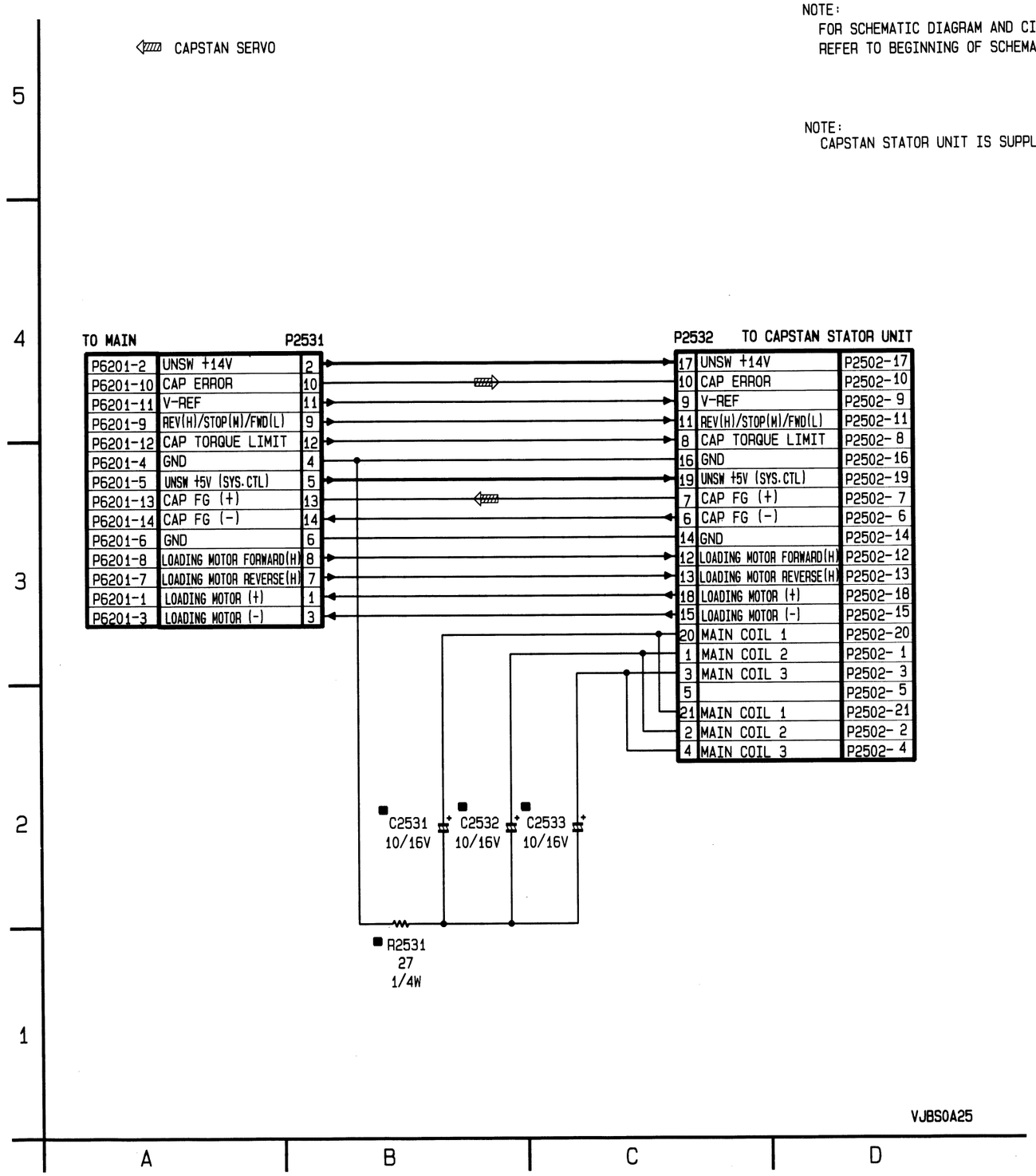

OPERATION SCHEMATIC DIAGRAM (G)

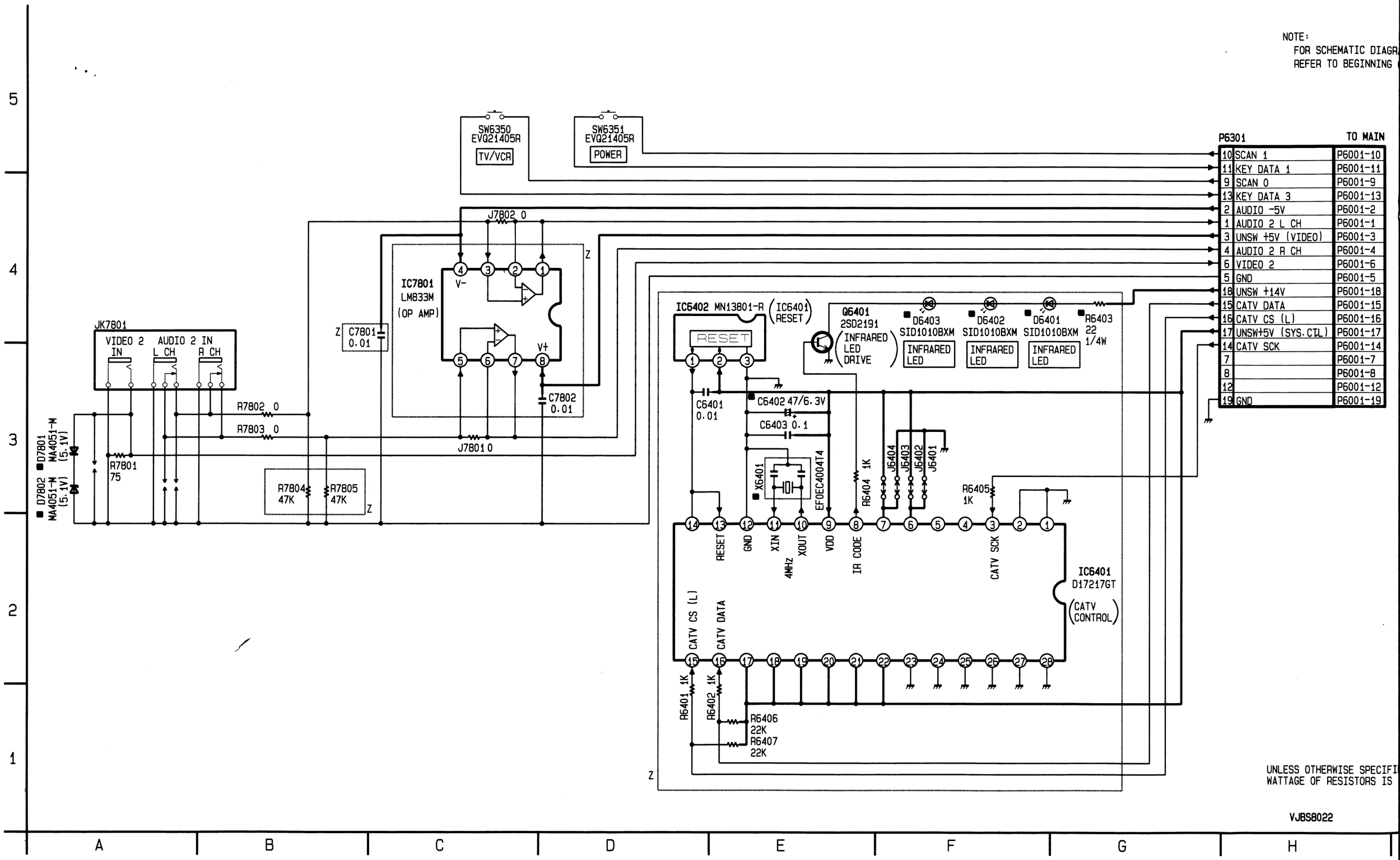

NOTE:
FOR SCHEMATIC DIAGRAM AND CIRCUIT BOARD LAYOUT NOTES,
REFER TO BEGINNING OF SCHEMATIC SECTION.

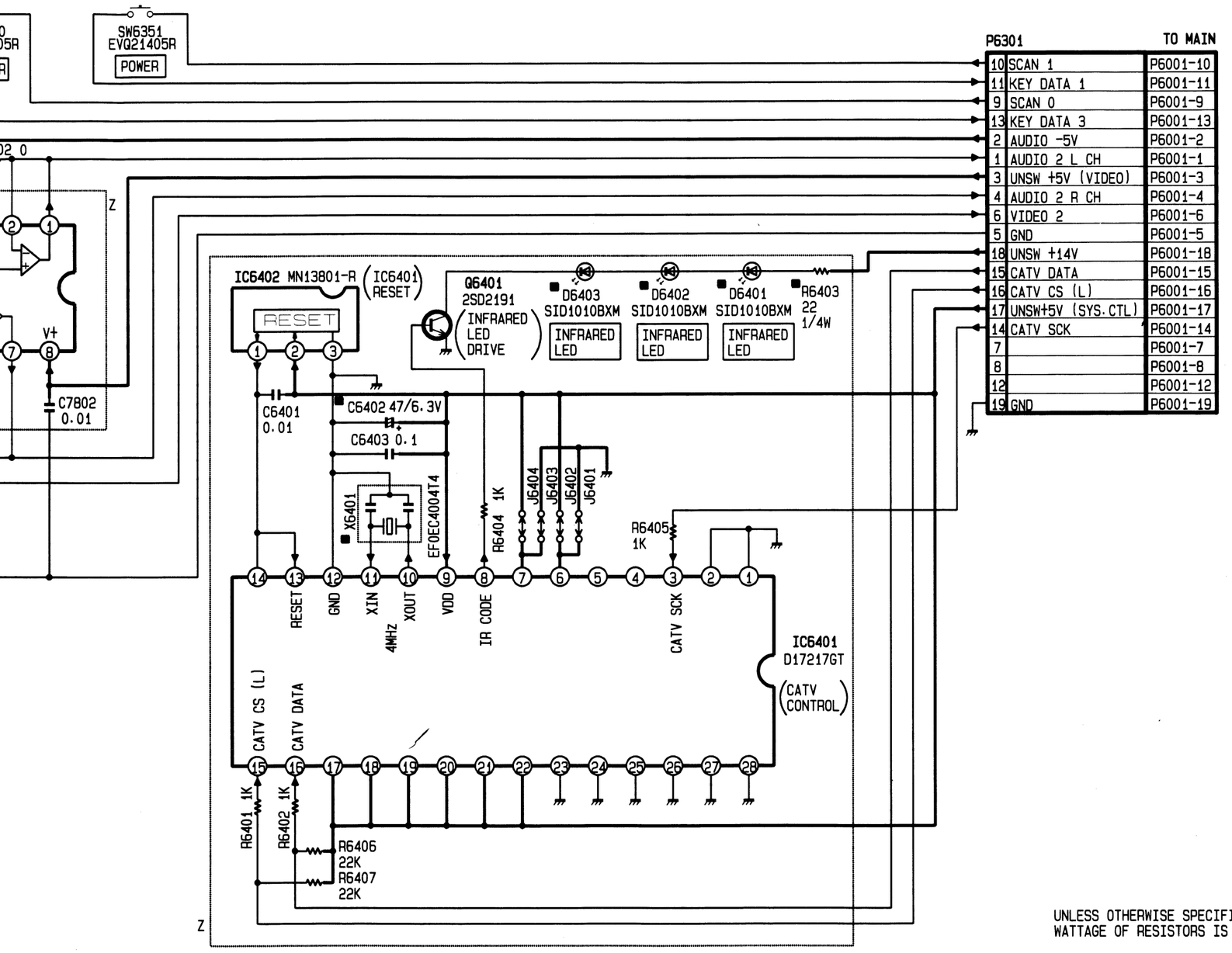

COMPARISON CHART
OF MODELS & MARKS

MODEL	MARK
VHQ720	A
PV-7400	B
PV-7401	C
PV-7401-K	D
VHQ740	E
PV-7450	F
PV-7451	G
VHQ760	H
Not Used	Z

UNLESS OTHERWISE SPECIFIED:
WATTAGE OF RESISTORS IS 1/10W.

VJBS8022

OPERATION VOLTAGE CHART

MODE / PIN NO.	REC	PLAY
IC6401		
1	0	0
2	0	0
3	5.1	5.1
4	---	---
5	---	---
6	0	0
7	0	0
8	0	0
9	5.1	5.1
10	2.6	2.6
11	2.6	2.6
12	0	0
13	5.1	5.1
14	5.1	5.1
15	5.1	5.1
16	5.1	5.1
17	5.1	5.1
18	5.1	5.1
19	5.1	5.1
20	5.1	5.1
21	5.1	5.1
22	5.1	5.1
23	0	0
24	0	0
25	0	0
26	0	0
27	0	0
28	0	0
IC6402		
1	5.1	5.1
2	5.1	5.1
3	0	0
IC7801		
1	0	0
2	0	0
3	0	0
4	-5.0	-5.0
5	0	0
6	0	0
7	0	0
8	5.1	5.1
Q6401		
E	0	0
B	0	0
C	11.0	11.0

MAIN I (POWER SUPPLY/SYSTEM CONTROL/SERVO/OPERATION) SCHEMATIC DIAGRAM (A,E,H)

NOTE:
FOR SCHEMATIC DIAGRAM AND CIRCUIT BOARD LAYOUT
REFER TO BEGINNING OF SCHEMATIC SECTION.

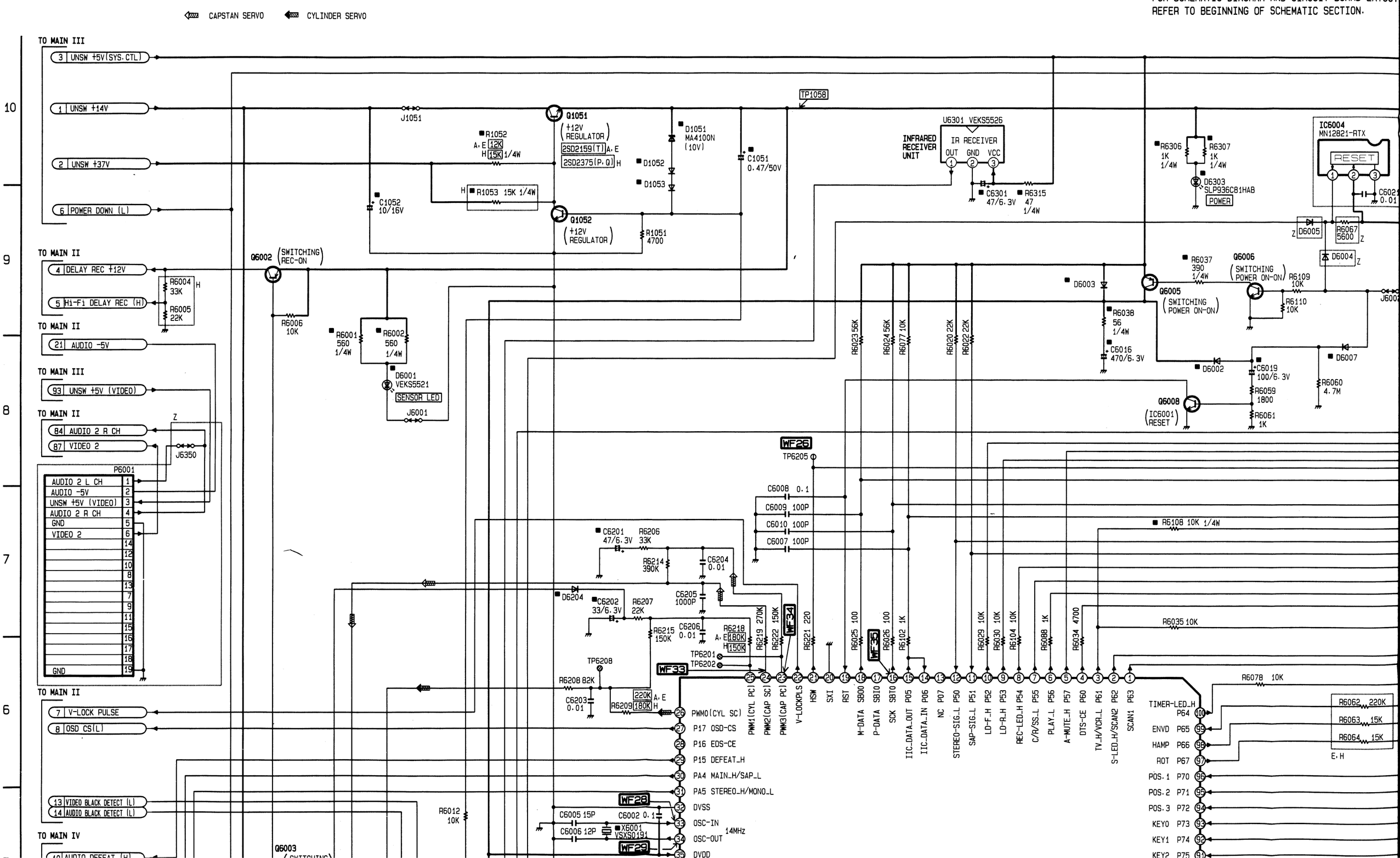

※ 1 IC6001 replacement note:

Model No.	products	replacement parts
VHQ720 VHQ740 VHQ760	MN675048A5B2 MN675048A5B1 MN675048A5B	MN675048A5B2

IC6001 KEY MATRIX

KEY DATA IN	SCAN	
	SCAN 1 (PIN 1)	SCAN 2 (PIN 2)
KEY DATA 3 (PIN 90)	POWER	REW /REVIEW
KEY DATA 4 (PIN 89)	TV/VCR	FF/CUE
KEY DATA 5 (PIN 88)	CH UP	-----
KEY DATA 6 (PIN 87)	CH DOWN	REC/TIME
KEY DATA 7 (PIN 86)	STOP /EJECT	PLAY

COMPARISON CHART OF MODELS & MARKS

MODEL	MARK
VHQ720	A
PV-7400	B
PV-7401	C
PV-7401-K	D
VHQ740	E
PV-7450	F
PV-7451	G
VHQ760	H
Not Used	Z

NOTE:
FOR SCHEMATIC DIAGRAM AND CIRCUIT BOARD LAYOUT NOTES, REFER TO BEGINNING OF SCHEMATIC SECTION.

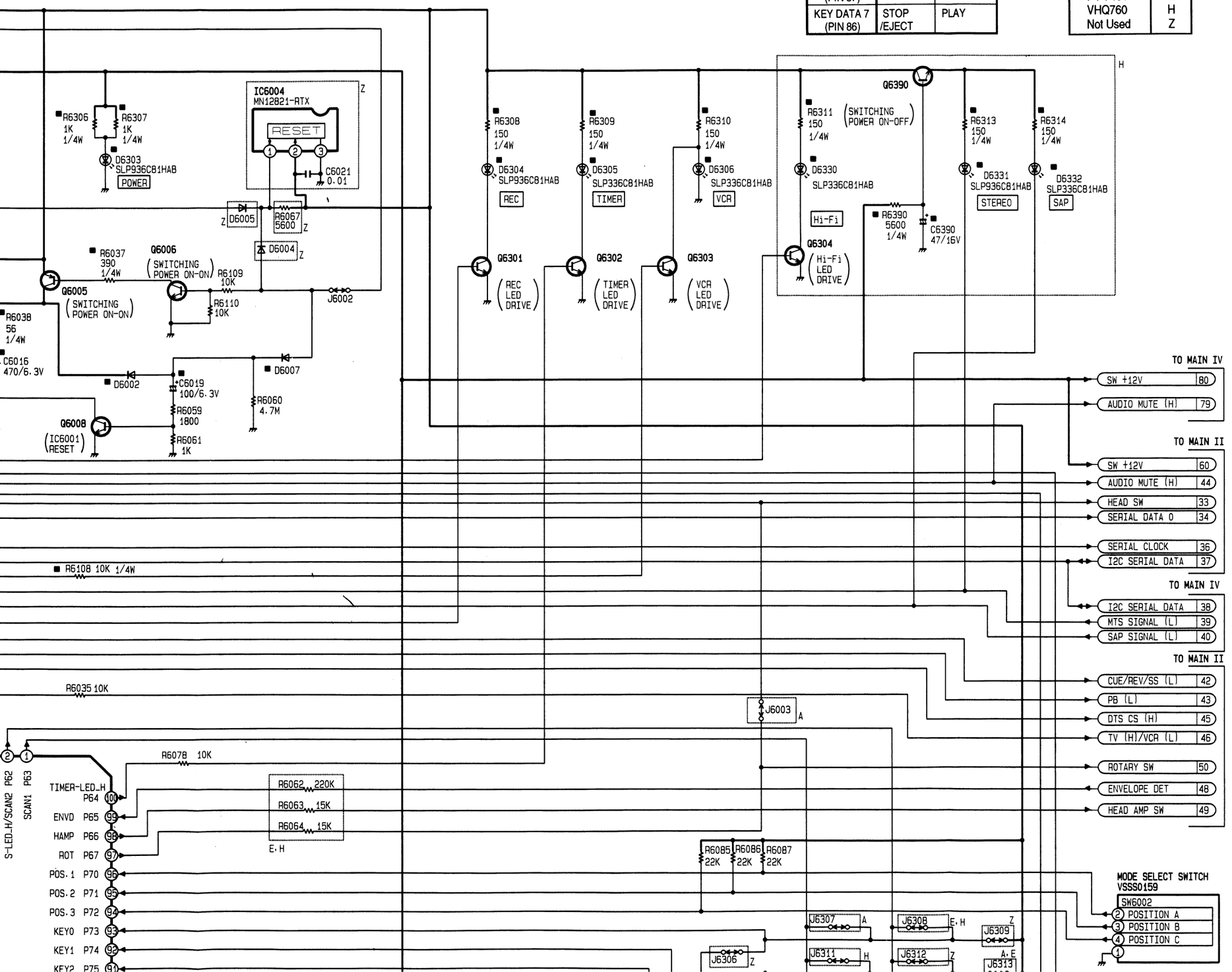

I/O CHART FOR IC6001(MN675048A5B2)

PIN NO.	I/O	FUNCTION
1	O	SCAN1
2	O	SCAN2
3	O	TV (H)/VCR (L)
4	O	DTS-CS (H)
5	O	AUDIO MUTE (H)
6	O	PB (L)
7	O	CUE/REV/SS (L)
8	O	REC LED (H)
9	O	LOADING MOTOR REVERSE (H)
10	O	LOADING MOTOR FORWARD (H)
11	I	SAP SIGNAL (L)
12	I	MTS SIGNAL (L)
13	---	(Not used)
14	I	I²C SERIAL DATA
15	O	I²C SERIAL DATA
16	O	SERIAL CLOCK
17	I	SERIAL DATA 1
18	O	SERIAL DATA O
19	I	RESET
20	---	GND
21	O	HEAD SW
22	O	V-LOCK PULSE
23	O	CAP PHASE ERROR
24	O	CAP SPEED ERROR
25	O	CAP PHASE ERROR
26	O	CAP SPEED ERROR
27	O	OSD CS (L)
28	---	(Not used)
29	O	AUDIO DEFEAT (H)
30	O	MAIN (H)/SAP (L)
31	O	STEREO (H)/MONO (L)
32	---	GND
33	I	OSC 1
34	O	OSC 2
35	---	VDD
36	O	Hi-Fi LED ON (H)
37	O	VIDEO DELAY REC (H)
38	---	(Not used)
39	O	Hi-Fi HEAD SW
40	O	H ROLL ACCELERATION
41	O	FORCED ACCELERATION
42	O	CAP REV(H)/STOP(M)/FWD(L)
43	O	CAP TORQUE LIMIT 1
44	O	7.16MHz
45	O	BEEPER
46	I	PB Hi-Fi AUDIO (H)
47	I	IR DATA
48	O	+12V POWER ON (H)
49	O	I²C SERIAL CLOCK
50	O	AIP CTL SIGNAL (Not used)

PIN NO.	I/O	FUNCTION
51	O	SPATIALIZER CTL (H/L/OFF)
52	I	SIGNAL LINE (H)
53	---	(Not used)
54	---	(Not used)
55	---	(Not used)
56	I	POWER DOWN (L)
57	I	PG SHIFTER
58	O	AMP
59	O	AMP SW
60	---	AMP -
61	I	AMP +
62	I	CAP FG
63	O	CAP FG
64	I	CAP FG
65	---	GND
66	I	CYL PG/FG
67	O	V-REF 1
68	I	V-REF 2
69	---	(Not used)
70	---	CONTROL PULSE (-)
71	---	CONTROL PULSE (+)
72	---	VDD
73	---	CTL AMP
74	---	GND
75	O	PB CTL PULSE
76	---	V-SYNC
77	I	SAFETY TAB BROKEN (H)
78	I	SIGNAL (L)
79	I	CH FREQUENCY LOCK
80	I	AFC
81	I	SUPPLY PHOTO TR (L)
82	I	TAKEUP PHOTO TR (L)
83	I	SUPPLY REEL PULSE
84	I	TAKEUP REEL PULSE/SERVICE (L)
85	I	ENVELOPE VOLTAGE
86	I	KEY DATA 7
87	I	KEY DATA 6
88	I	KEY DATA 5
89	I	KEY DATA 4
90	I	KEY DATA 3
91	I	KEY DATA 2
92	I	KEY DATA 1
93	I	KEY DATA 0
94	I	MODE SW POSITION C
95	I	MODE SW POSITION B
96	I	MODE SW POSITION A
97	O	ROTARY SW
98	O	HEAD AMP SW
99	I	ENVELOPE DET
100	O	TIMER LED ON (H)

MAIN I VOLTAGE CHART

MODE / PIN NO.	STOP	REC	PLAY	FF	REW
IC6001					
1	5.1	5.1	5.1	5.1	5.1
2	1.4	1.4	1.4	1.4	1.4
3	0.1	0.1	0.1	0.1	0.1
4	0.3	0.3	0.3	0.3	0.3
5	0.2	0.2	0.2	0.2	0.2
6	5.1	5.1	0.1	5.1	5.1
7	5.1	5.1	5.1	5.1	5.1
8	1.3	1.3	1.3	1.3	1.3
9	0	0	0	0	0
10	0	0	0	0	0
11	5.0	5.0	0.1	5.0	5.0
12	5.1	5.1	5.1	5.1	5.1
13	---	---	---	---	---
14	3.9	3.9	3.9	3.9	3.9
15	3.9	3.9	3.9	3.9	3.9
16	4.5	4.5	4.5	4.5	4.5
17	5.1	5.1	5.1	5.1	5.1
18	4.7	4.7	4.7	4.7	4.7
19	5.1	5.1	5.1	5.1	5.1
20	0	0	0	0	0
21	2.6	2.6	2.6	2.6	2.6
22	0.1	0.1	0.1	0.1	0.1
23	2.7	2.7	2.7	2.7	2.7
24	0	2.6	2.6	2.6	2.6
25	1.9	2.3	2.3	2.6	2.6
26	2.6	2.6	2.6	2.6	2.6
27	4.1	4.1	4.1	4.1	4.1
28	0	0	0	0	0
29	5.1	5.1	5.1	5.1	5.1
30	5.1	5.1	5.1	5.1	5.1
31	0	0	0	0	0
32	0	0	0	0	0
33	2.6	2.6	2.6	2.6	2.6

MODE / PIN NO.	STOP	REC	PLAY	FF	REW
95	0.1	5.2	5.2	5.2	5.2
96	5.1	0.1	0.1	0.1	0.1
97	2.6	2.6	2.6	2.6	2.6
98	0.1	0.1	0.1	0.1	0.1
99	0.2	0.2	0.2	0.2	0.2
100	5.1	5.1	5.1	5.1	5.1
IC6002					
1	1.3	1.3	1.3	1.3	1.3
2	0	0	0	0	0
3	1.3	1.3	1.3	1.3	1.3
4	---	---	---	---	---
IC6003					
1	0	0	0	0	0
2	1.3	1.3	1.3	1.3	1.3
3	0	0	0	0	0
4	---	---	---	---	---
Q1051					
E	12.0	12.0	12.0	12.0	12.0
C	13.2	13.2	13.2	13.2	13.2
B	12.6	11.6	12.6	12.6	12.6
Q1052					
E	0	0	0	0	0
C	12.6	11.6	12.6	12.6	12.6
B	0.7	0.7	0.7	0.7	0.7
Q6002					
E	12.1	12.1	12.1	12.1	12.1
C	0.5	12.1	0.5	0.5	0.5
B	12.1	11.2	12.1	12.1	12.1
Q6003					
E	0.4	1.1	0.4	0.4	0.4
C	12.1	11.2	12.1	12.1	12.1
B	0	5.0	0	0	0
Q6005					
E	5.1	5.1	5.1	5.1	5.1

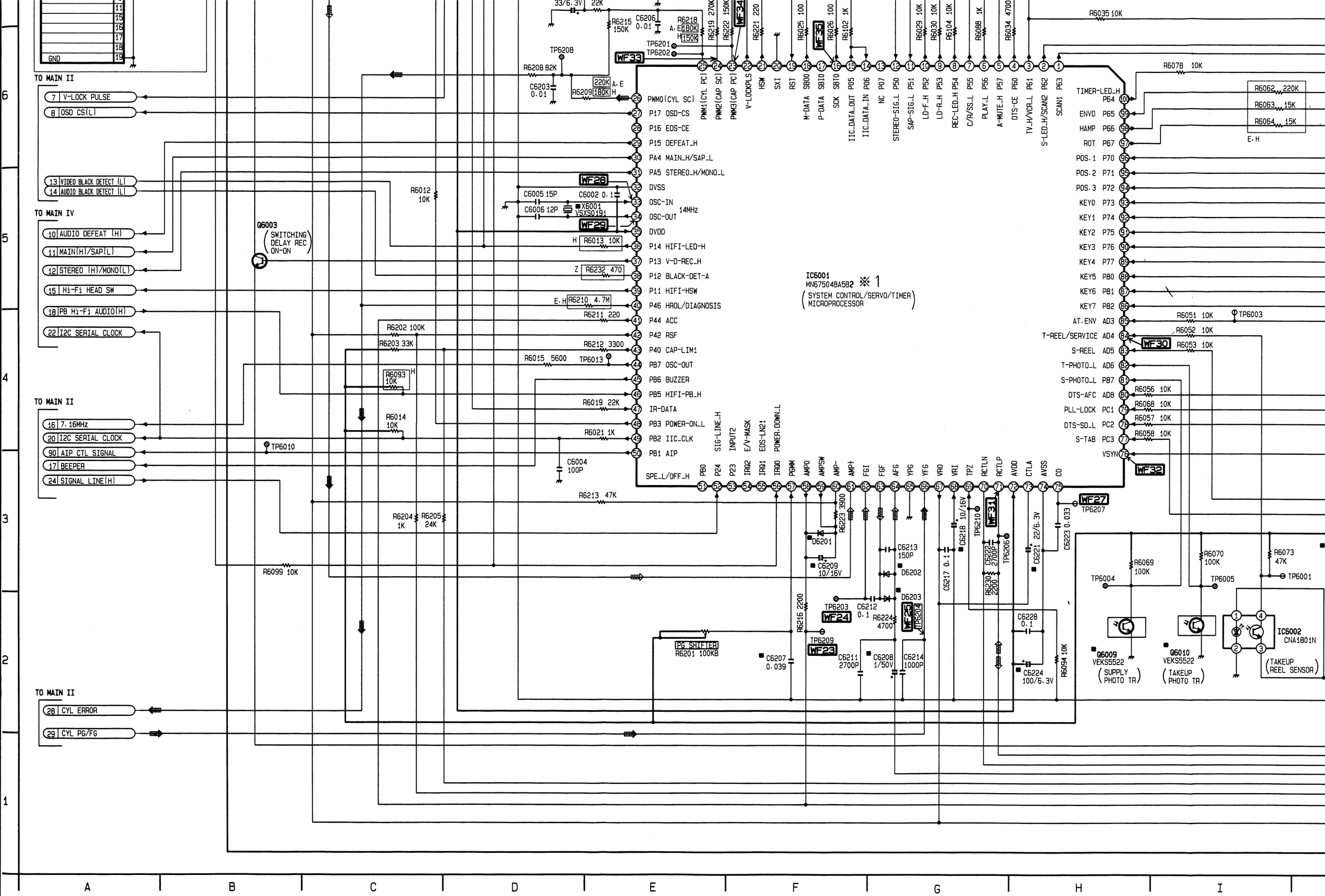
IC6001
MN675048A5B2 ※1
(SYSTEM CONTROL/SERVO/TIMER MICROPROCESSOR)
Q6003
(SWITCHING DELAY REC ON-ON)
X6001
VSXS0191
14MHz
PG SHIFTER
R6201 100KB
IC6002
CNA1801N
(TAKEUP REEL SENSOR)
Q6009
VEKS5522
(SUPPLY PHOTO TR)
Q6010
VEKS5522
(TAKEUP PHOTO TR)
TO MAIN II
TO MAIN IV
7 V-LOCK PULSE
8 OSD CS(L)
13 VIDEO BLACK DETECT (L)
14 AUDIO BLACK DETECT (L)
10 AUDIO DEFEAT (H)
11 MAIN(H)/SAP(L)
12 STEREO (H)/MONO(L)
15 Hi-Fi HEAD SW
18 PB Hi-Fi AUDIO(H)
22 I2C SERIAL CLOCK
16 7.16MHz
20 I2C SERIAL CLOCK
90 AIP CTL SIGNAL
17 BEEPER
24 SIGNAL LINE(H)
28 CYL ERROR
29 CYL PG/FG
PWM0(CYL SC)
P17 OSD-CS
P16 EDS-CE
P15 DEFEAT_H
PA4 MAIN_H/SAP_L
PA5 STEREO_H/MONO_L
DVSS
OSC-IN
OSC-OUT
DVDD
P14 HIFI-LED-H
P13 V-D-REC_H
P12 BLACK-DET-A
P11 HIFI-HSW
P46 HROL/DIAGNOSIS
P44 ACC
P42 RSF
P40 CAP-LIM1
PB7 OSC-OUT
PB6 BUZZER
PB5 HIFI-PB_H
IR-DATA
PB3 POWER-ON_L
PB2 IIC_CLK
PB1 AIP
SPE_L/OFF_H
TIMER-LED_H
ENVD
HAMP
ROT
POS.1
POS.2
POS.3
KEY0
KEY1
KEY2
KEY3
KEY4
KEY5
KEY6
KEY7
AT.ENV
T-REEL/SERVICE
S-REEL
T-PHOTO_L
S-PHOTO_L
DTS-AFC
PLL-LOCK
DTS-SD_L
S-TAB
VSYN
WF33
WF34
WF35
WF28
WF29
WF30
WF32
WF27
WF31
WF24
WF23
WF26
WF25

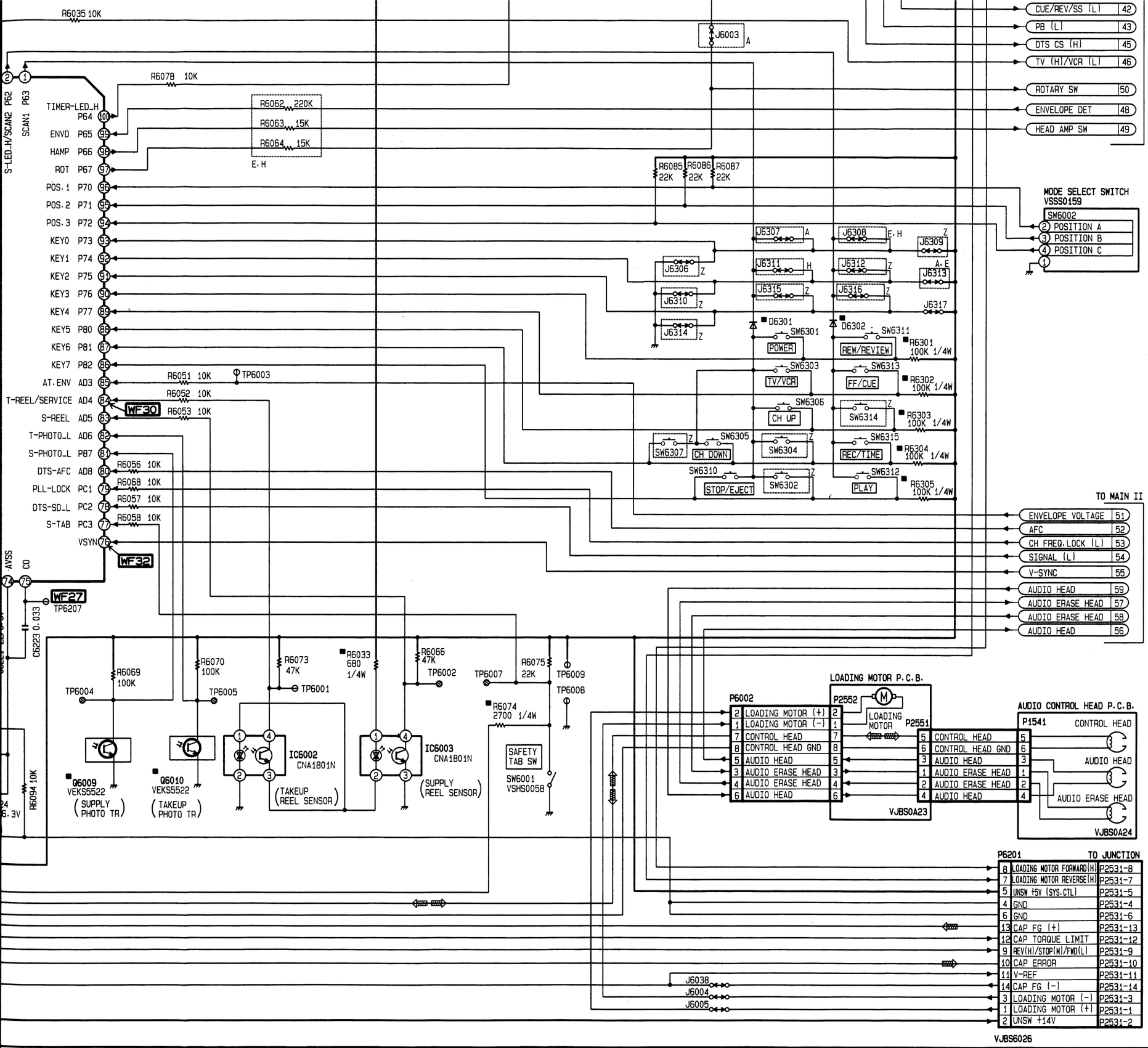

7	5.1	5.1	5.1	5.1	5.1
8	1.3	1.3	1.3	1.3	1.3
9	0	0	0	0	0
10	0	0	0	0	0
11	5.0	5.0	0.1	5.0	5.0
12	5.1	5.1	5.1	5.1	5.1
13	---	---	---	---	---
14	3.9	3.9	3.9	3.9	3.9
15	3.9	3.9	3.9	3.9	3.9
16	4.5	4.5	4.5	4.5	4.5
17	5.1	5.1	5.1	5.1	5.1
18	4.7	4.7	4.7	4.7	4.7
19	5.1	5.1	5.1	5.1	5.1
20	0	0	0	0	0
21	2.6	2.6	2.6	2.6	2.6
22	0.1	0.1	0.1	0.1	0.1
23	2.7	2.7	2.7	2.7	2.7
24	0	2.6	2.6	2.6	2.6
25	1.9	2.3	2.3	2.6	2.6
26	2.6	2.6	2.6	2.6	2.6
27	4.1	4.1	4.1	4.1	4.1
28	0	0	0	0	0
29	5.1	5.1	5.1	5.1	5.1
30	5.1	5.1	5.1	5.1	5.1
31	0	0	0	0	0
32	0	0	0	0	0
33	2.6	2.6	2.6	2.6	2.6
34	2.6	2.6	2.6	2.6	2.6
35	5.1	5.1	5.1	5.1	5.1
36	5.1	5.1	5.1	5.1	5.1
37	0	5.1	0	0	0
38	---	---	---	---	---
39	4.5	4.5	5.2	4.5	4.5
40	2.2	2.2	2.2	2.2	2.2
41	1.1	2.4	2.4	2.4	2.4
42	2.6	0.1	0.1	0.1	5.0
43	5.0	5.0	5.0	5.0	5.0
44	2.6	2.6	2.6	2.6	2.6
45	---	---	---	---	---
46	5.1	5.1	5.1	5.1	5.1
47	5.0	5.0	5.0	5.0	5.0
48	0	0	0	0	0
49	4.1	4.1	4.1	4.1	4.1
50	5.1	5.1	4.5	5.1	5.1
51	---	---	---	---	---
52	5.1	5.1	5.1	5.1	5.1
53	---	---	---	---	---
54	---	---	---	---	---
55	---	---	---	---	---
56	5.2	5.2	5.2	5.2	5.2
57	3.0	3.0	3.0	3.0	3.0
58	2.4	2.4	2.4	2.4	2.4
59	2.6	2.6	2.6	2.6	2.6
60	2.6	2.6	2.6	2.6	2.6
61	2.6	2.6	2.6	2.6	2.6
62	2.6	2.6	2.6	2.6	2.6
63	2.6	2.6	2.6	2.6	2.6
64	2.6	2.6	2.6	2.6	2.6
65	0	0	0	0	0
66	1.2	1.2	1.2	1.2	1.2
67	2.6	2.6	2.6	2.6	2.6
68	2.6	2.6	2.6	2.6	2.6
69	0	0	0	0	0
70	2.6	2.6	2.6	2.6	2.6
71	2.6	2.6	0	2.6	2.6
72	5.1	5.1	5.1	5.1	5.1
73	2.6	2.6	2.6	2.6	2.6
74	0	0	0	0	0
75	2.6	2.6	2.6	2.6	2.6
76	0.5	0.5	0.5	0.5	0.5
77	0	0	0	0	0
78	5.1	5.1	5.1	5.1	5.1
79	0.1	0.1	0.1	0.1	0.1
80	2.6	2.6	2.6	2.6	2.6
81	5.1	5.1	5.1	5.1	5.1
82	5.1	5.1	5.1	5.1	5.1
83	5.1	5.1	5.1	5.1	5.1
84	0.2	0.2	0.2	0.2	0.2
85	3.7	3.7	5.1	3.7	3.7
86	5.2	5.2	5.2	5.2	5.2
87	5.2	5.2	5.2	5.2	5.2
88	5.2	5.2	5.2	5.2	5.2
89	5.2	5.2	5.2	5.2	5.2
90	5.2	5.2	5.2	5.2	5.2
91	5.2	5.2	5.2	5.2	5.2
92	5.0	5.0	5.0	5.0	5.0
93	1.4	1.4	1.4	1.4	1.4
94	5.2	5.2	5.2	5.2	5.2

IC6002					
1	1.3	1.3	1.3	1.3	1.3
2	0	0	0	0	0
3	1.3	1.3	1.3	1.3	1.3
4	---	---	---	---	---
IC6003					
1	0	0	0	0	0
2	1.3	1.3	1.3	1.3	1.3
3	0	0	0	0	0
4	---	---	---	---	---
Q1051					
E	12.0	12.0	12.0	12.0	12.0
C	13.2	13.2	13.2	13.2	13.2
B	12.6	11.6	12.6	12.6	12.6
Q1052					
E	0	0	0	0	0
C	12.6	11.6	12.6	12.6	12.6
B	0.7	0.7	0.7	0.7	0.7
Q6002					
E	12.1	12.1	12.1	12.1	12.1
C	0.5	12.1	0.5	0.5	0.5
B	12.1	11.2	12.1	12.1	12.1
Q6003					
E	0.4	1.1	0.4	0.4	0.4
C	12.1	11.2	12.1	12.1	12.1
B	0	5.0	0	0	0
Q6005					
E	5.1	5.1	5.1	5.1	5.1
C	5.1	5.1	5.1	5.1	5.1
B	4.4	4.4	4.4	4.4	4.4
Q6006					
E	0	0	0	0	0
C	0	0	0	0	0
B	0.8	0.8	0.8	0.8	0.8
Q6008					
E	0	0	0	0	0
C	5.0	5.0	5.0	5.0	5.0
B	0	0	0	0	0
Q6009					
E	0	0	0	0	0
C	5.1	5.1	5.1	5.1	5.1
B	---	---	---	---	---
Q6010					
E	0	0	0	0	0
C	5.1	5.1	5.1	5.1	5.1
B	---	---	---	---	---
Q6301					
E	0	0	0	0	0
C	0	5.1	0	0	0
B	0	0	0	0	0
Q6302					
E	0	0	0	0	0
C	5.1	5.1	5.1	5.1	5.1
B	0	0	0	0	0
Q6303					
E	0	0	0	0	0
C	12.0	12.0	12.0	12.0	12.0
B	0.1	0.1	0.1	0.1	0.1
Q6304					
E	0	0	0	0	0
C	0	0	0	0	0
B	5.1	5.1	5.1	5.1	5.1
Q6390					
E	5.1	5.1	5.1	5.1	5.1
C	5.1	5.1	5.1	5.1	5.1
B	0	0	0	0	0
TP1058	12.0	12.0	12.0	12.0	12.0
TP6001	---	---	---	---	---
TP6002	0.2	0.2	0.2	0.2	0.2
TP6003	3.4	3.4	3.0	3.4	3.4
TP6004	4.9	4.9	4.9	4.9	4.9
TP6005	5.1	5.1	5.1	5.1	5.1
TP6006	4.9	4.9	4.9	4.9	4.9
TP6007	0.3	0.3	0.3	0.3	0.3
TP6008	0	0	0	0	0
TP6009	---	---	---	---	---
TP6010	0	5.1	0	0	0
TP6011	0	0	0	0	0
TP6013	0	0	0	0	0
TP6201	2.6	2.6	2.6	2.6	2.6
TP6202	2.1	2.1	2.1	2.1	2.1
TP6203	2.6	2.6	2.6	2.6	2.6
TP6204	1.2	1.2	1.2	1.2	1.2
TP6205	2.6	2.6	2.6	2.6	2.6
TP6206	0	3.0	0	0	0
TP6207	2.6	2.6	2.6	2.6	2.6
TP6208	2.5	2.5	2.5	2.5	2.5
TP6209	1.1	2.4	2.4	2.4	2.4
TP6210	0	0	0	0	0

UNLESS OTHERWISE SPECIFIED:
PNP TRANSISTORS IS
2SB709(R,S),
NPN TRANSISTORS IS
2SD601(R,S),
DIODES IS MA165,
SWITCHES IS EVQ21309K AND
WATTAGE OF RESISTORS IS 1/10W.

MAIN II (SIGNAL PROCESS/AUDIO) SCHEMATIC DIAGRAM (A,E,H)

NOTE:
FOR SCHEMATIC DIAGRAM
REFER TO BEGINNING OF

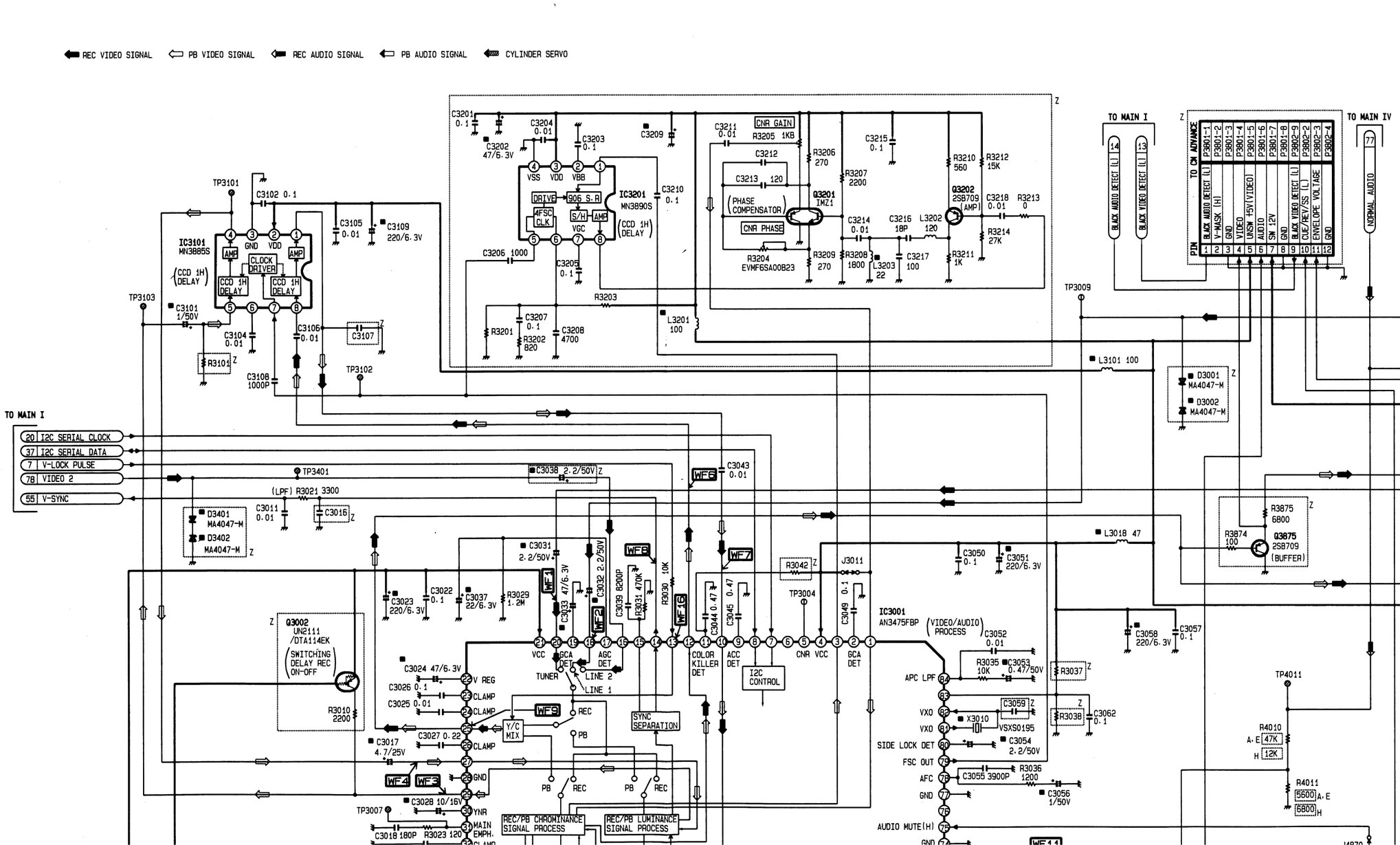

NOTE:
FOR SCHEMATIC DIAGRAM AND CIRCUIT BOARD LAYOUT NOTES, REFER TO BEGINNING OF SCHEMATIC SECTION.

COMPARISON CHART OF MODELS & MARKS

MODEL	MARK
VHQ720	A
PV-7400	B
PV-7401	C
PV-7401-K	D
VHQ740	E
PV-7450	F
PV-7451	G
VHQ760	H
Not Used	Z

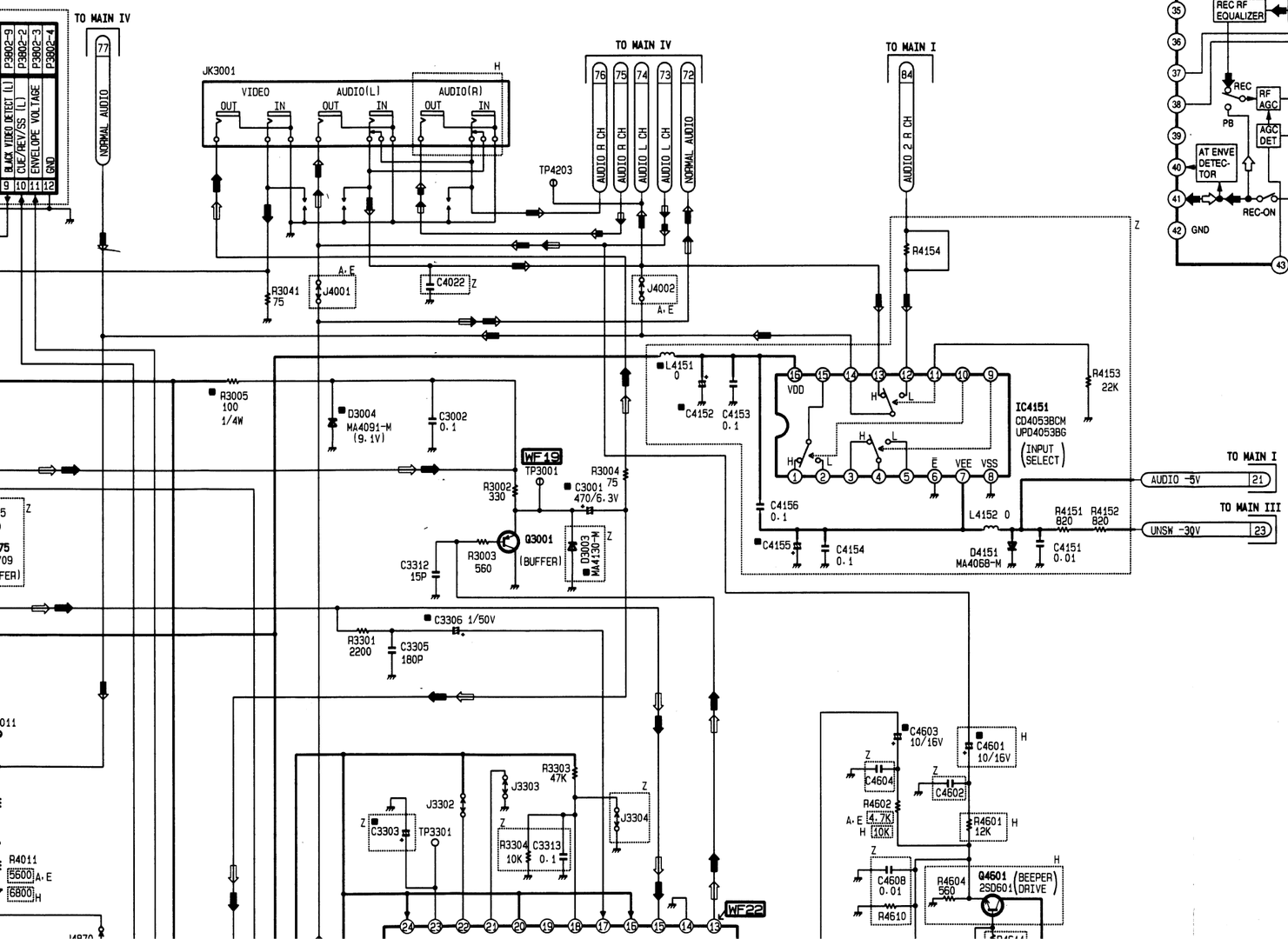

IC3001 Video/Audio Process IC-Block Diagram, AN3475FBP

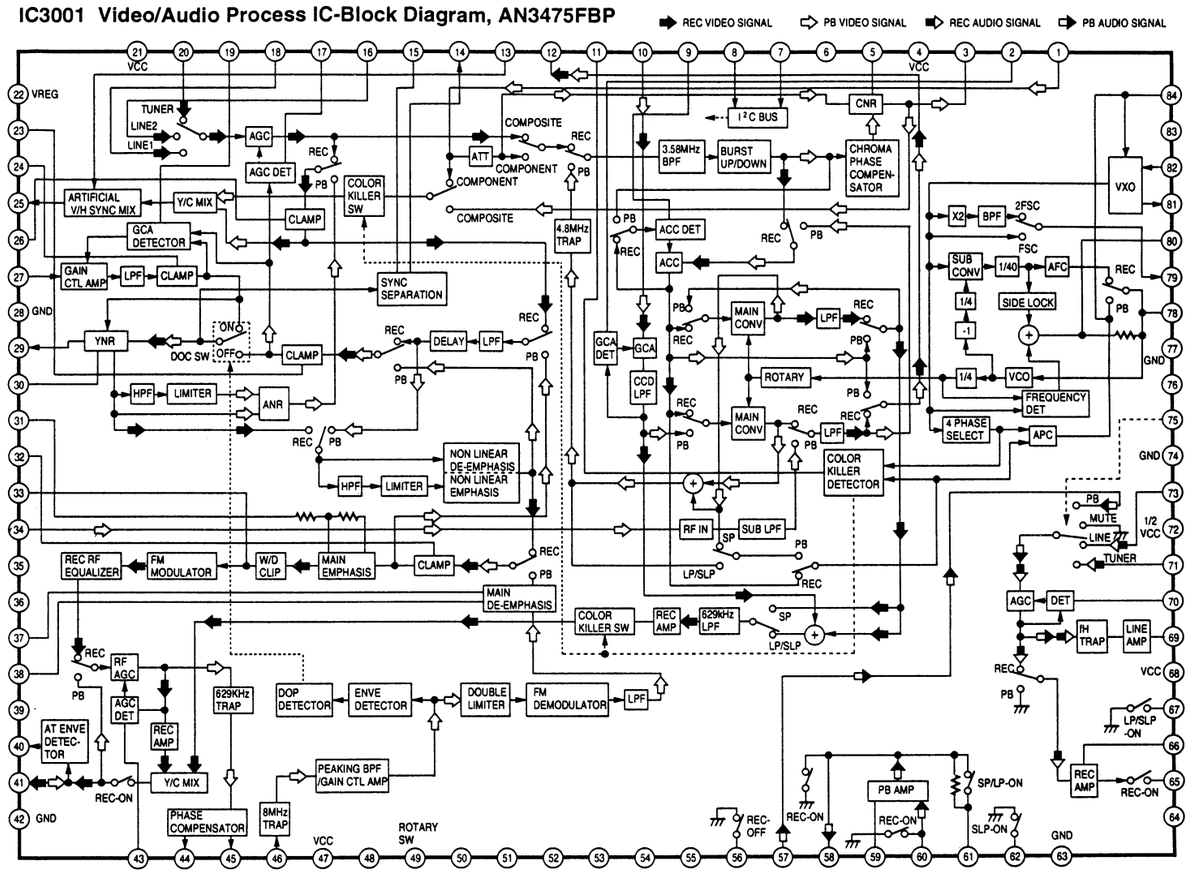

MAIN II VOLTAGE CHART

MODE / PIN NO.	REC	PLAY
IC3001		
1	5.1	5.1
2	3.3	3.3
3	2.1	2.1
4	5.1	5.1
5	4.3	4.3
6	---	---
7	4.2	4.2
8	4.0	4.0
9	2.2	2.2
10	2.8	2.8
11	0.8	0.8
12	2.8	2.8
13	0.4	0.4
14	0.5	0.5
15	1.0	1.0
16	3.1	3.9
17	2.3	1.8
18	3.1	3.1
19	2.6	2.6
20	3.1	3.4
21	5.1	5.1
22	2.0	2.0
23	2.5	2.5
24	2.4	2.4
25	2.0	2.0
26	2.5	2.5
27	2.0	2.0
28	0	0
29	1.9	1.9
30	0	0
31	2.0	2.4
32	2.4	2.4
33	2.0	1.2

MODE / PIN NO.	REC	PLAY
IC3301		
1	0	0
2	2.8	2.8
3	---	---
4	5.1	5.1
5	2.9	3.4
6	2.6	2.6
7	2.6	2.6
8	5.1	5.1
9	4.1	4.1
10	4.5	4.5
11	4.4	4.4
12	5.1	5.1
13	2.0	2.0
14	0	0
15	2.0	2.0
16	5.1	5.1
17	2.9	2.9
18	2.1	2.1
19	---	---
20	5.1	5.1
21	0	0
22	5.1	5.1
23	---	---
24	5.1	5.1
Q3001		
E	2.8	2.8
C	0	0
B	2.0	2.0
Q4001		
E	5.1	5.1
C	-18.7	5.1
B	5.1	4.4

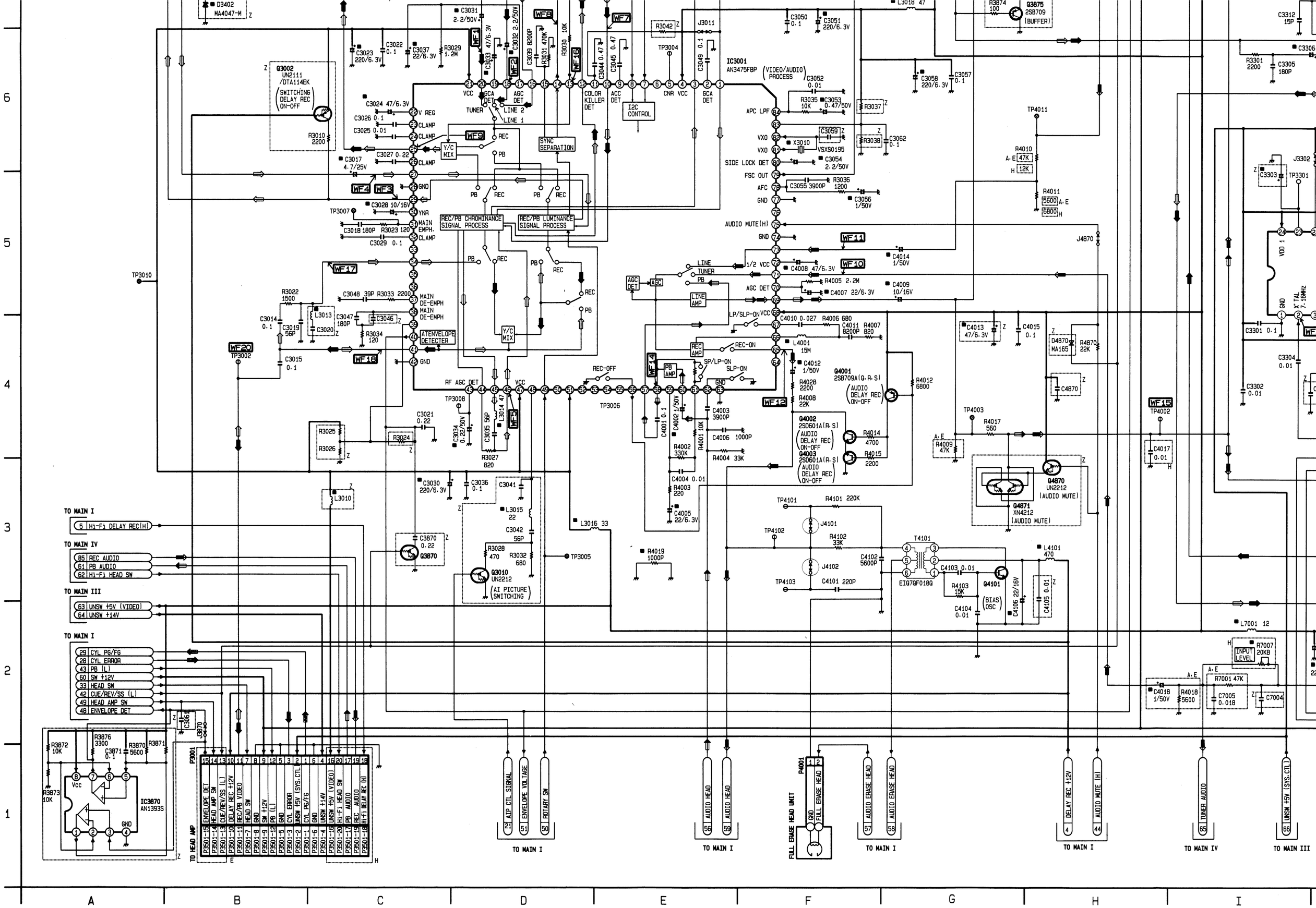
IC3001
AN3475FBP
(VIDEO/AUDIO PROCESS)
Q3002
UN2111
/DTA114EK
(SWITCHING DELAY REC ON-OFF)
Q3875
2SB709
(BUFFER)
Q4001
2SB709A(Q,R,S)
(AUDIO DELAY REC ON-OFF)
Q4002
2SD601A(R,S)
(AUDIO DELAY REC ON-OFF)
Q4003
2SD601A(R,S)
(AUDIO DELAY REC ON-OFF)
Q4870
UN2212
(AUDIO MUTE)
Q4871
XN4212
(AUDIO MUTE)
Q3870
Q3010
UN2212
(AI PICTURE SWITCHING)
Q4101
(BIAS OSC)
IC3870
AN1393S
T4101
EIQ7QF018Q
REC/PB CHROMINANCE SIGNAL PROCESS
REC/PB LUMINANCE SIGNAL PROCESS
SYNC SEPARATION
I2C CONTROL
ATENVELOPE DETECTER
TO MAIN I
TO MAIN IV
TO MAIN III
TO HEAD AMP
FULL ERASE HEAD UNIT
AUDIO HEAD
AUDIO ERASE HEAD
DELAY REC +12V
AUDIO MUTE (H)
TUNER AUDIO
UNSW +5V (SYS.CTL)
ATP CTL SIGNAL
ENVELOPE VOLTAGE
ROTARY SW

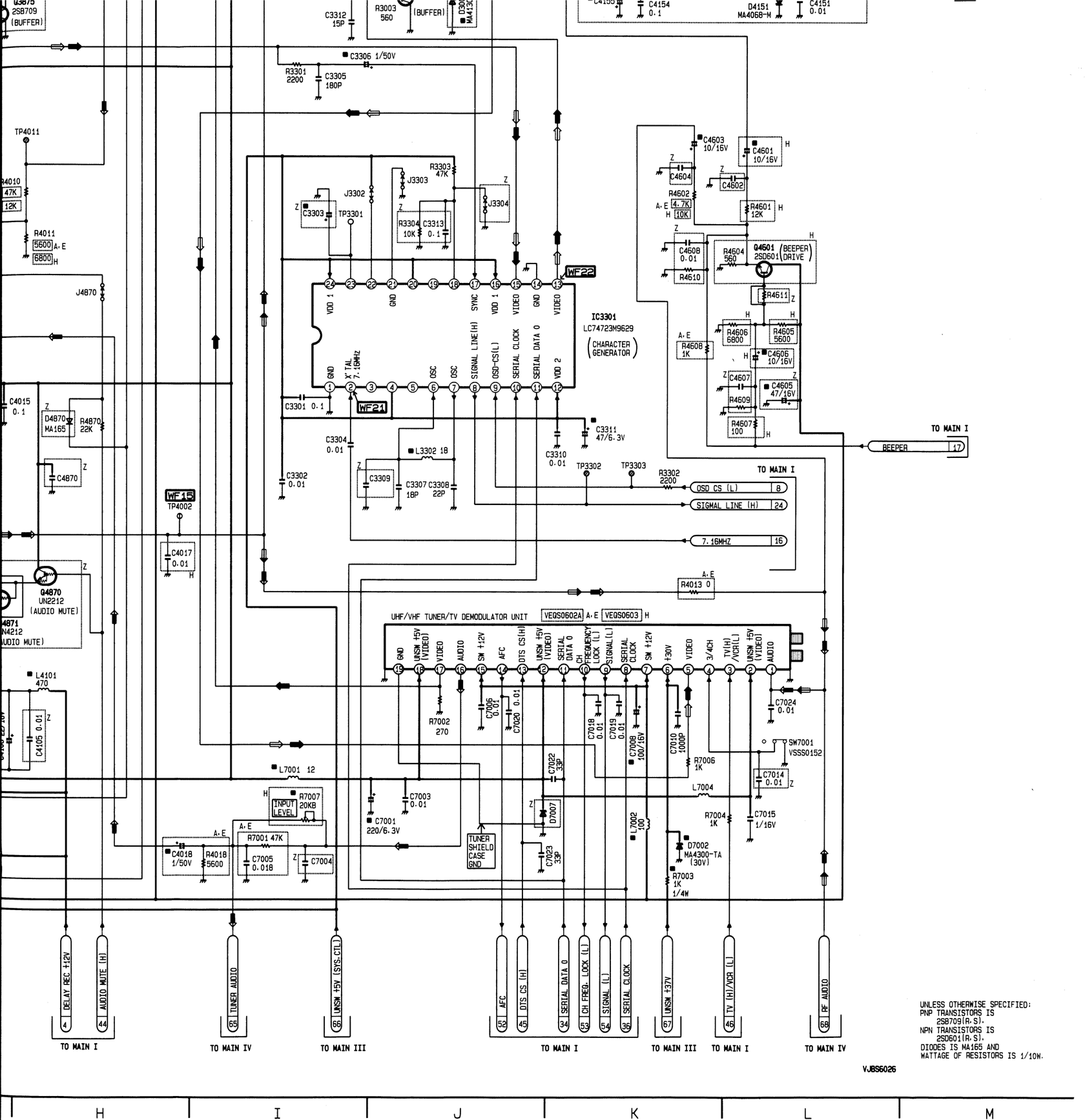

UNLESS OTHERWISE SPECIFIED:
PNP TRANSISTORS IS
2SB709(R, S),
NPN TRANSISTORS IS
2SD601(R, S),
DIODES IS MA165 AND
WATTAGE OF RESISTORS IS 1/10W.

10	2.8	2.8
11	0.8	0.8
12	2.8	2.8
13	0.4	0.4
14	0.5	0.5
15	1.0	1.0
16	3.1	3.9
17	2.3	1.8
18	3.1	3.1
19	2.6	2.6
20	3.1	3.4
21	5.1	5.1
22	2.0	2.0
23	2.5	2.5
24	2.4	2.4
25	2.0	2.0
26	2.5	2.5
27	2.0	2.0
28	0	0
29	1.9	1.9
30	0	0
31	2.0	2.4
32	2.4	2.4
33	2.0	1.2
34	3.0	2.8
35	2.6	2.6
36	---	---
37	0	1.5
38	4.6	2.2
39	2.4	2.0
40	3.8	5.1
41	2.8	3.6
42	0	0
43	3.4	3.4
44	2.6	2.6
45	2.6	2.6
46	2.6	2.6
47	5.1	5.1
48	1.2	1.0
49	2.6	2.6
50	---	---
51	5.1	5.1
52	---	---
53	---	---
54	---	---
55	---	---
56	5.1	0
57	0.8	2.6
58	2.6	2.6
59	2.6	2.6
60	2.6	2.6
61	2.6	2.6
62	0	0
63	0	0
64	---	---
65	2.6	2.6
66	2.6	2.6
67	2.6	2.6
68	5.1	5.1
69	2.7	2.7
70	0	0
71	2.6	2.6
72	2.6	2.6
73	2.6	2.6
74	0	0
75	0	0
76	---	---
77	0	0
78	2.1	2.1
79	3.0	3.0
80	2.1	2.1
81	2.5	2.5
82	2.8	2.8
83	2.6	2.6
84	2.5	2.5
IC3101		
1	3.4	3.4
2	5.1	5.1
3	0	0
4	3.2	3.2
5	2.9	3.4
6	-2.7	-2.7
7	2.1	2.1
8	3.0	3.0

10	4.5	4.5
11	4.4	4.4
12	5.1	5.1
13	2.0	2.0
14	0	0
15	2.0	2.0
16	5.1	5.1
17	2.9	2.9
18	2.1	2.1
19	---	---
20	5.1	5.1
21	0	0
22	5.1	5.1
23	---	---
24	5.1	5.1
Q3001		
E	2.8	2.8
C	0	0
B	2.0	2.0
Q4001		
E	5.1	5.1
C	-18.7	5.1
B	5.1	4.4
Q4002		
E	-13.6	0
C	0	0
B	-19.1	0.8
Q4003		
E	-13.6	0
C	0	0
B	-18.6	0.8
Q4101		
E	0	0
C	11.3	0.5
B	0.2	0.5
Q4601		
E	5.8	5.8
C	12.0	12.0
B	6.4	6.4
TP3001	2.8	2.8
TP3002	2.7	2.3
TP3004	4.3	4.3
TP3005	2.6	2.6
TP3007	2.1	2.1
TP3008	3.4	3.4
TP3009	0	0
TP3010	5.1	5.1
TP3101	3.2	3.2
TP3103	1.8	1.8
TP3302	5.1	5.1
TP3303	4.1	4.1
TP3401	0	0
TP4002	0	0
TP4003	0	0
TP4011	0	0
TP4101	0	0
TP4102	0	0
TP4103	0	0
TP4203	0	0

MAIN I (POWER SUPPLY/SYSTEM CONTROL/SERVO) SCHEMATIC DIAGRAM (B,C,D,F,G)

NOTE:
FOR SCHEMATIC DIAGRAM AND CIRCUIT BOARD LAYOUT NOTES, REFER TO BEGINNING OF SCHEMATIC SECTION.

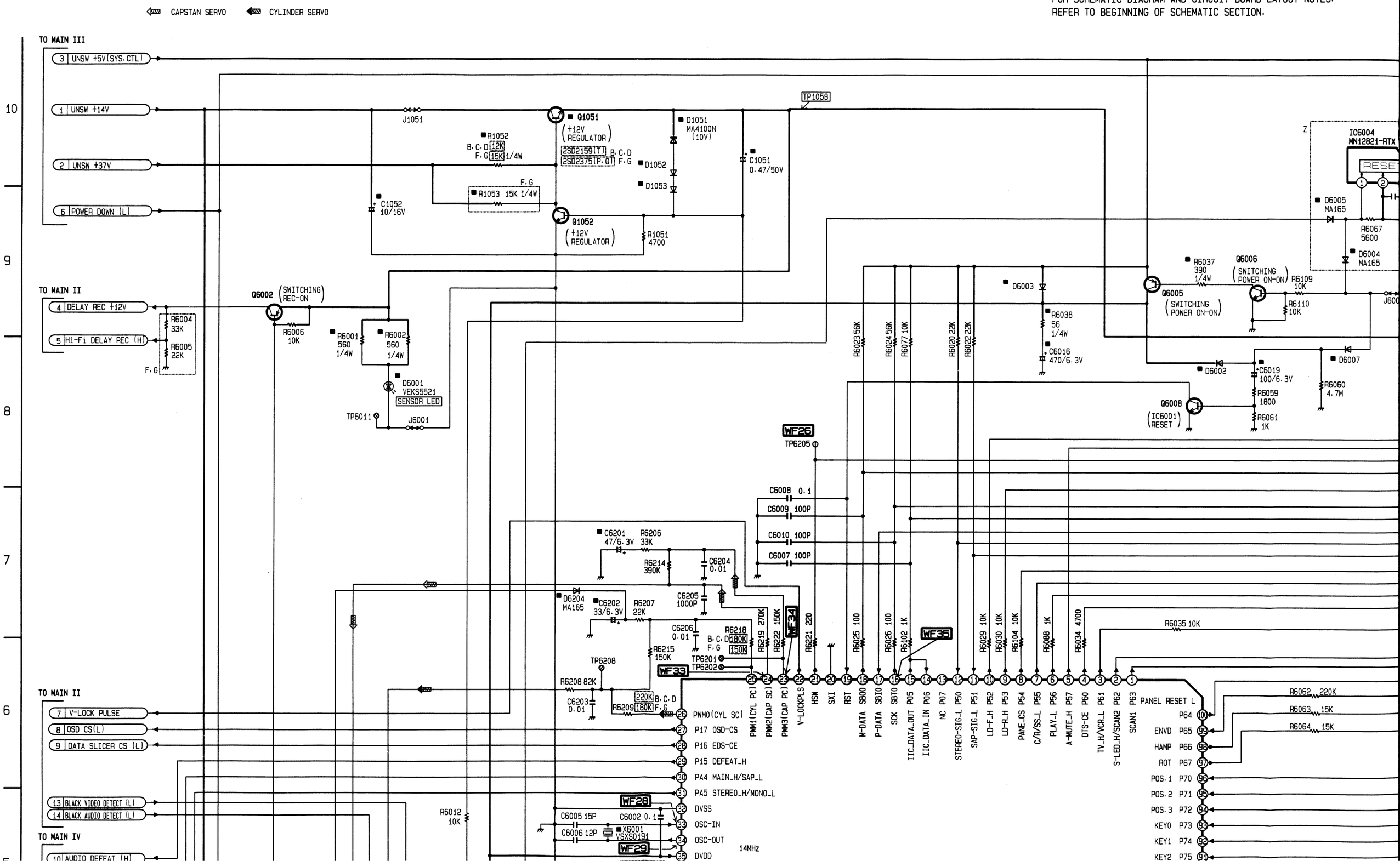

TIC DIAGRAM AND CIRCUIT BOARD LAYOUT NOTES.
EGINNING OF SCHEMATIC SECTION.

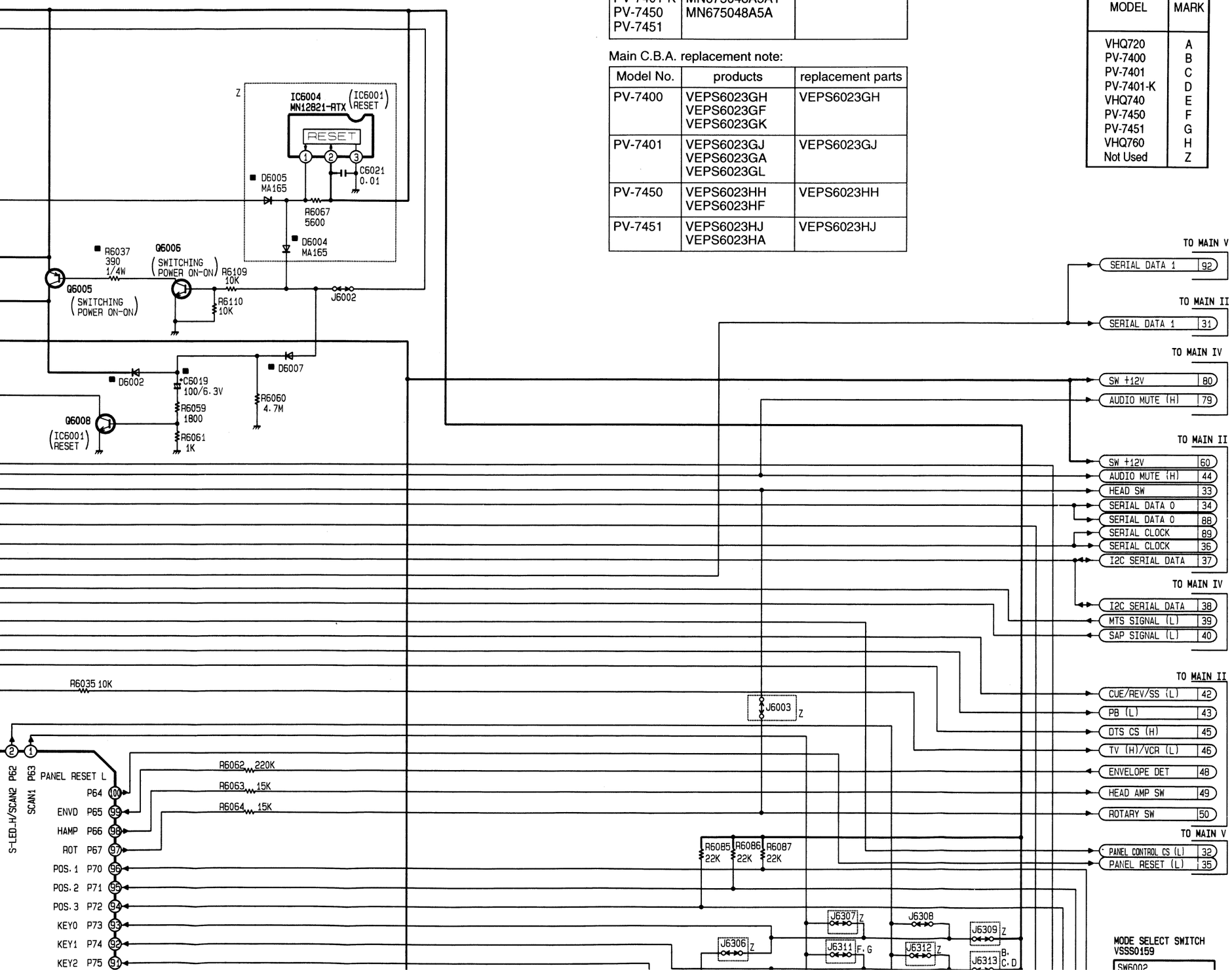

※ 1 IC6001 replacement note:

Model No.	products	replacement parts
PV-7400 PV-7401 PV-7401-K PV-7450 PV-7451	MN675048A5A3 MN675048A5A2 MN675048A5A1 MN675048A5A	MN675048A5A3

Main C.B.A. replacement note:

Model No.	products	replacement parts
PV-7400	VEPS6023GH VEPS6023GF VEPS6023GK	VEPS6023GH
PV-7401	VEPS6023GJ VEPS6023GA VEPS6023GL	VEPS6023GJ
PV-7450	VEPS6023HH VEPS6023HF	VEPS6023HH
PV-7451	VEPS6023HJ VEPS6023HA	VEPS6023HJ

COMPARISON CHART
OF MODELS & MARKS

MODEL	MARK
VHQ720	A
PV-7400	B
PV-7401	C
PV-7401-K	D
VHQ740	E
PV-7450	F
PV-7451	G
VHQ760	H
Not Used	Z

I/O CHART FOR IC6001(MN675048A5A3)

PIN NO.	I/O	FUNCTION
1	O	SCAN1
2	O	SCAN2
3	O	TV (H)/VCR (L)
4	O	DTS-CS (H)
5	O	AUDIO MUTE (H)
6	O	PB (L)
7	O	CUE/REV/SS (L)
8	O	PANEL CONTROL CS (L)
9	O	LOADING MOTOR REVERSE (H)
10	O	LOADING MOTOR FORWARD (H)
11	I	SAP SIGNAL (L)
12	I	MTS SIGNAL (L)
13	---	(Not used)
14	I	I²C SERIAL DATA
15	O	I²C SERIAL DATA
16	O	SERIAL CLOCK
17	I	SERIAL DATA 1
18	O	SERIAL DATA O
19	I	RESET
20	---	GND
21	O	HEAD SW
22	O	V-LOCK PULSE
23	O	CAP PHASE ERROR
24	O	CAP SPEED ERROR
25	O	CAP PHASE ERROR
26	O	CAP SPEED ERROR
27	O	OSD CS (L)
28	O	DATA SLICER CS (L)
29	O	AUDIO DEFEAT (H)
30	O	MAIN (H)/SAP (L)
31	O	STEREO (H)/MONO (L)
32	---	GND
33	I	OSC 1
34	O	OSC 2
35	---	VDD
36	O	V-MASK (H) (Not used)
37	O	VIDEO DELAY REC (H)
38	---	(Not used)
39	O	Hi-Fi HEAD SW
40	O	H ROLL ACCELERATION
41	O	FORCED ACCELERATION
42	O	CAP REV(H)/STOP(M)/FWD(L)
43	O	CAP TORQUE LIMIT 1
44	O	7.16MHz
45	O	BEEPER
46	I	PB Hi-Fi AUDIO (H)
47	I	IR DATA
48	O	+12V POWER ON (H)
49	O	I²C SERIAL CLOCK
50	O	AIP CTL SIGNAL (Not used)

PIN NO.	I/O	FUNCTION
51	O	SPATIALIZER CTL (H/L/OFF)
52	I	SIGNAL LINE (H)
53	I	INPUT SELECT 2 (Not used)
54	O	BLACK DETECT (L)
55	I	EDS CLOCK DATA
56	I	POWER DOWN (L)
57	I	PG SHIFTER
58	O	AMP
59	O	AMP SW
60	---	AMP -
61	I	AMP +
62	I	CAP FG
63	O	CAP FG
64	I	CAP FG
65	---	GND
66	I	CYL PG/FG
67	O	V-REF 1
68	I	V-REF 2
69	---	(Not used)
70	---	CONTROL PULSE (-)
71	---	CONTROL PULSE (+)
72	---	VDD
73	---	CTL AMP
74	---	GND
75	O	PB CTL PULSE
76	---	V-SYNC
77	I	SAFETY TAB BROKEN (H)
78	I	SIGNAL (L)
79	I	CH FREQUENCY LOCK
80	I	AFC
81	I	SUPPLY PHOTO TR (L)
82	I	TAKEUP PHOTO TR (L)
83	I	SUPPLY REEL PULSE
84	I	TAKEUP REEL PULSE/SERVICE (L)
85	I	ENVELOPE VOLTAGE
86	I	KEY DATA 7
87	I	KEY DATA 6
88	I	KEY DATA 5
89	I	KEY DATA 4
90	I	KEY DATA 3
91	I	KEY DATA 2
92	I	KEY DATA 1
93	I	KEY DATA 0
94	I	MODE SW POSITION C
95	I	MODE SW POSITION B
96	I	MODE SW POSITION A
97	O	ROTARY SW
98	O	HEAD AMP SW
99	I	ENVELOPE DET
100	O	PANEL RESET (L)

MAIN I VOLTAGE CHART

MODE / PIN NO.	STOP	REC	PLAY	FF	REW
IC6001					
1	5.1	5.1	5.1	5.1	5.1
2	1.4	1.4	1.4	1.4	1.4
3	0.1	0.1	0.1	0.1	0.1
4	0.3	0.3	0.3	0.3	0.3
5	0.2	0.2	0.2	0.2	0.2
6	5.1	5.1	0.1	5.1	5.1
7	5.1	5.1	5.1	5.1	5.1
8	1.3	1.3	1.3	1.3	1.3
9	0	0	0	0	0
10	0	0	0	0	0
11	5.0	5.0	0.1	5.0	5.0
12	5.1	5.1	5.1	5.1	5.1
13	---	---	---	---	---
14	3.9	3.9	3.9	3.9	3.9
15	3.9	3.9	3.9	3.9	3.9
16	4.5	4.5	4.5	4.5	4.5
17	5.1	5.1	5.1	5.1	5.1
18	4.7	4.7	4.7	4.7	4.7
19	5.1	5.1	5.1	5.1	5.1
20	0	0	0	0	0
21	2.6	2.6	2.6	2.6	2.6
22	0.1	0.1	0.1	0.1	0.1
23	2.7	2.7	2.7	2.7	2.7
24	0	2.6	2.6	2.6	2.6
25	1.9	2.3	2.3	2.6	2.6
26	2.6	2.6	2.6	2.6	2.6
27	4.1	4.1	4.1	4.1	4.1
28	0	0	0	0	0
29	5.1	5.1	5.1	5.1	5.1
30	5.1	5.1	5.1	5.1	5.1
31	0	0	0	0	0
32	0	0	0	0	0
33	2.6	2.6	2.6	2.6	2.6
34	2.6	2.6	2.6	2.6	2.6
35	5.1	5.1	5.1	5.1	5.1

MODE / PIN NO.	STOP	REC	PLAY	FF	REW
95	0.1	5.2	5.2	5.2	5.2
96	5.1	0.1	0.1	0.1	0.1
97	2.6	2.6	2.6	2.6	2.6
98	0.1	0.1	0.1	0.1	0.1
99	0.2	0.2	0.2	0.2	0.2
100	5.1	5.1	5.1	5.1	5.1
IC6002					
1	1.3	1.3	1.3	1.3	1.3
2	0	0	0	0	0
3	1.3	1.3	1.3	1.3	1.3
4	---	---	---	---	---
IC6003					
1	0	0	0	0	0
2	1.3	1.3	1.3	1.3	1.3
3	0	0	0	0	0
4	---	---	---	---	---
Q1051					
E	12.0	12.0	12.0	12.0	12.0
C	13.2	13.2	13.2	13.2	13.2
B	12.6	11.6	12.6	12.6	12.6
Q1052					
E	0	0	0	0	0
C	12.6	11.6	12.6	12.6	12.6
B	0.7	0.7	0.7	0.7	0.7
Q6002					
E	12.1	12.1	12.1	12.1	12.1
C	0.5	12.1	0.5	0.5	0.5
B	12.1	11.2	12.1	12.1	12.1
Q6003					
E	0.4	1.1	0.4	0.4	0.4
C	12.1	11.2	12.1	12.1	12.1
B	0	5.0	0	0	0
Q6005					
E	5.1	5.1	5.1	5.1	5.1
C	5.1	5.1	5.1	5.1	5.1
B	5.1	5.1	5.1	5.1	5.1

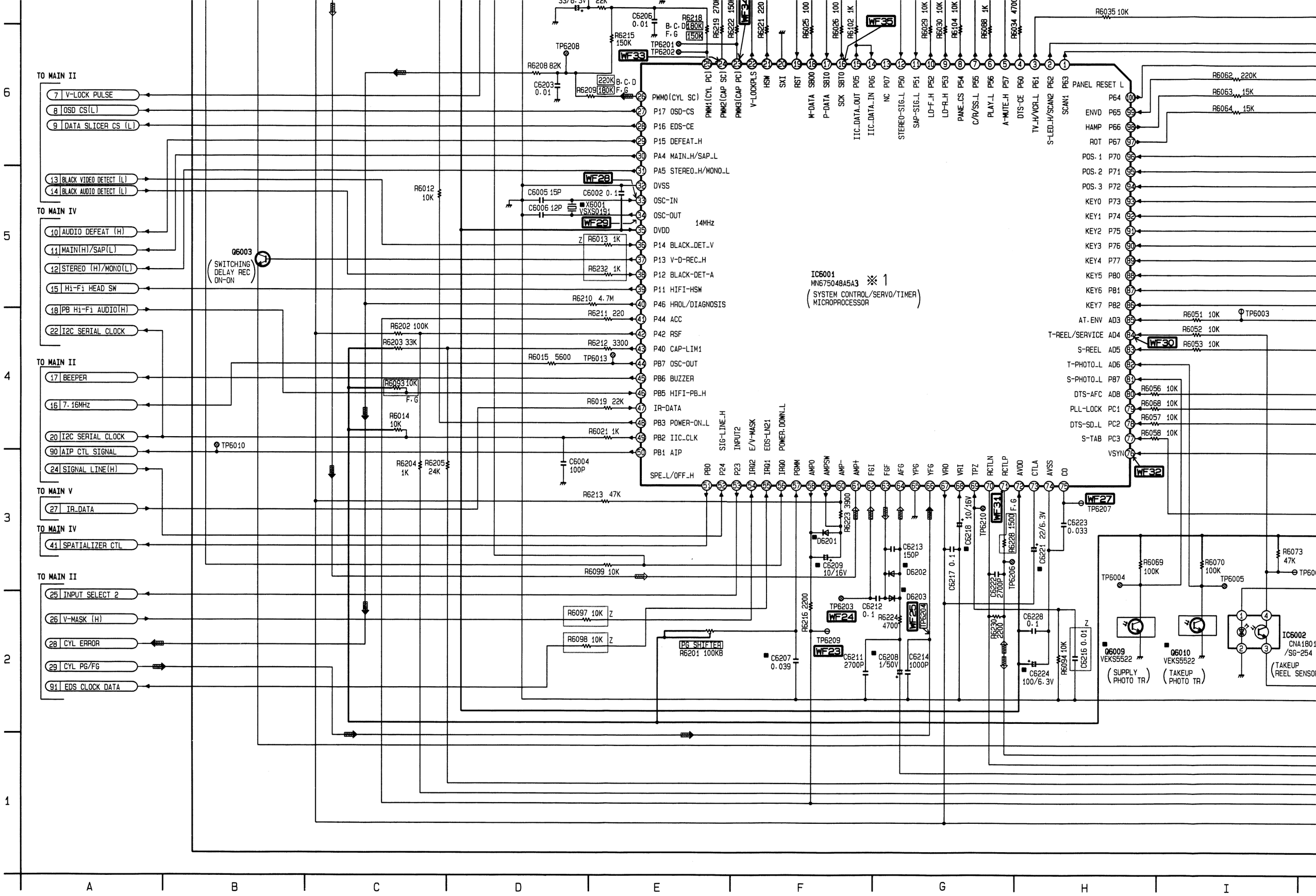
TO MAIN II
7 V-LOCK PULSE
8 OSD CS(L)
9 DATA SLICER CS (L)
13 BLACK VIDEO DETECT (L)
14 BLACK AUDIO DETECT (L)
TO MAIN IV
10 AUDIO DEFEAT (H)
11 MAIN(H)/SAP(L)
12 STEREO (H)/MONO(L)
15 Hi-Fi HEAD SW
18 PB Hi-Fi AUDIO(H)
22 I2C SERIAL CLOCK
TO MAIN II
17 BEEPER
16 7.16MHz
20 I2C SERIAL CLOCK
90 AIP CTL SIGNAL
24 SIGNAL LINE(H)
TO MAIN V
27 IR_DATA
TO MAIN IV
41 SPATIALIZER CTL
TO MAIN II
25 INPUT SELECT 2
26 V-MASK (H)
28 CYL ERROR
29 CYL PG/FG
91 EDS CLOCK DATA
Q6003
SWITCHING DELAY REC ON-ON
IC6001
MN675048A5A3 ※1
SYSTEM CONTROL/SERVO/TIMER MICROPROCESSOR
X6001 VSXS0191
14MHz
PG SHIFTER R6201 100KB
Q6009 VEKS5522
SUPPLY PHOTO TR
Q6010 VEKS5522
TAKEUP PHOTO TR
IC6002 CNA1801 /SG-254
TAKEUP REEL SENSOR
PWM0(CYL SC)
P17 OSD-CS
P16 EDS-CE
P15 DEFEAT_H
PA4 MAIN_H/SAP_L
PA5 STEREO_H/MONO_L
DVSS
OSC-IN
OSC-OUT
DVDD
P14 BLACK_DET_V
P13 V-D-REC_H
P12 BLACK-DET-A
P11 HIFI-HSW
P46 HROL/DIAGNOSIS
P44 ACC
P42 RSF
P40 CAP-LIM1
PB7 OSC-OUT
PB6 BUZZER
PB5 HIFI-PB_H
IR-DATA
PB3 POWER-ON_L
PB2 IIC_CLK
PB1 AIP
SPE_L/OFF_H
PANEL RESET L
ENVD
HAMP
ROT
POS.1
POS.2
POS.3
KEY0
KEY1
KEY2
KEY3
KEY4
KEY5
KEY6
KEY7
AT.ENV
T-REEL/SERVICE
S-REEL
T-PHOTO_L
S-PHOTO_L
DTS-AFC
PLL-LOCK
DTS-SD_L
S-TAB
VSYN
WF23
WF24
WF25
WF27
WF28
WF29
WF30
WF31
WF32
WF33
WF35

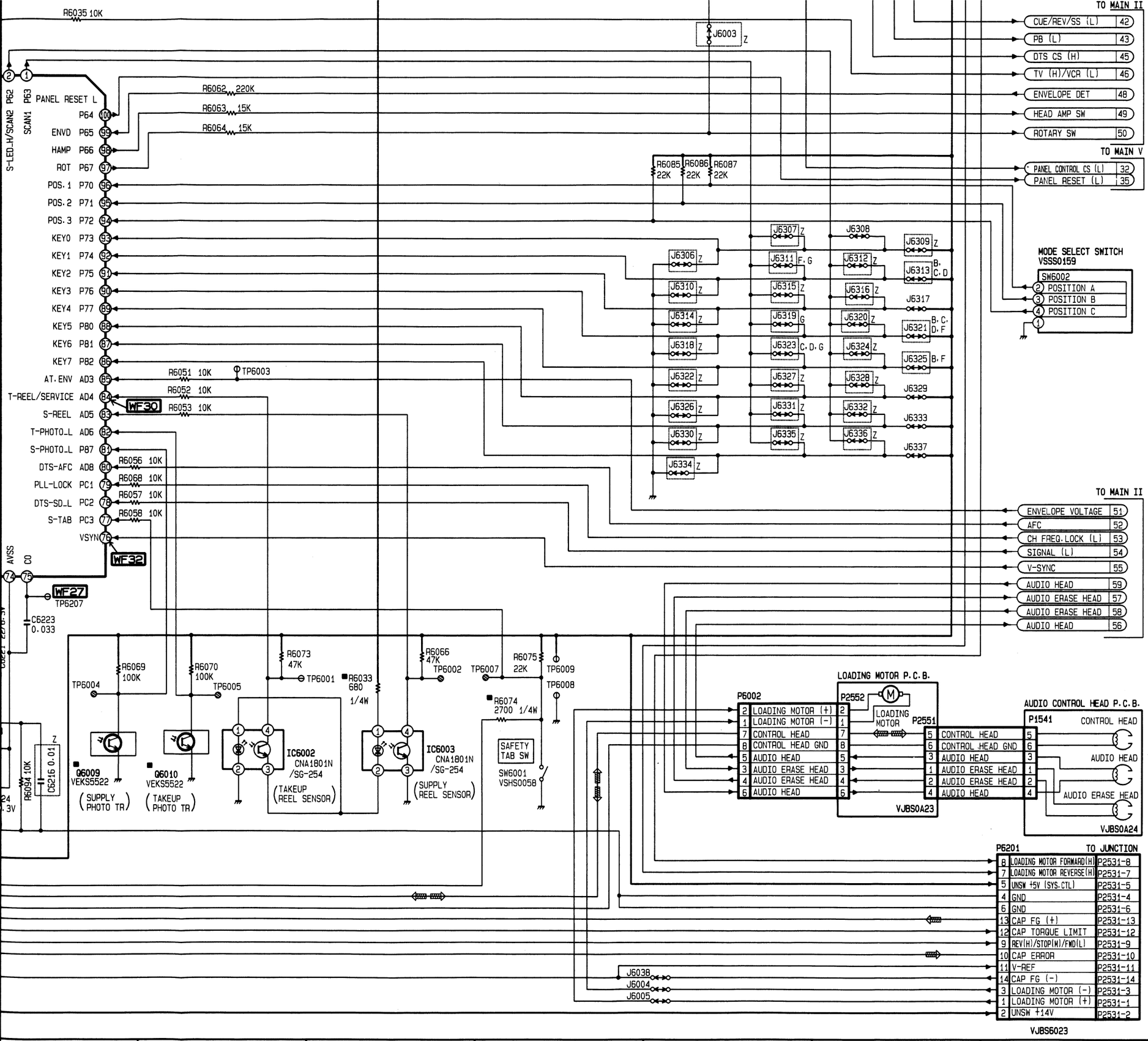

2	1.3	1.3	1.3	1.3	1.3
9	0	0	0	0	0
10	0	0	0	0	0
11	5.0	5.0	0.1	5.0	5.0
12	5.1	5.1	5.1	5.1	5.1
13	---	---	---	---	---
14	3.9	3.9	3.9	3.9	3.9
15	3.9	3.9	3.9	3.9	3.9
16	4.5	4.5	4.5	4.5	4.5
17	5.1	5.1	5.1	5.1	5.1
18	4.7	4.7	4.7	4.7	4.7
19	5.1	5.1	5.1	5.1	5.1
20	0	0	0	0	0
21	2.6	2.6	2.6	2.6	2.6
22	0.1	0.1	0.1	0.1	0.1
23	2.7	2.7	2.7	2.7	2.7
24	0	2.6	2.6	2.6	2.6
25	1.9	2.3	2.3	2.6	2.6
26	2.6	2.6	2.6	2.6	2.6
27	4.1	4.1	4.1	4.1	4.1
28	0	0	0	0	0
29	5.1	5.1	5.1	5.1	5.1
30	5.1	5.1	5.1	5.1	5.1
31	0	0	0	0	0
32	0	0	0	0	0
33	2.6	2.6	2.6	2.6	2.6
34	2.6	2.6	2.6	2.6	2.6
35	5.1	5.1	5.1	5.1	5.1
36	---	---	---	---	---
37	0	5.1	0	0	0
38	---	---	---	---	---
39	4.5	4.5	5.2	4.5	4.5
40	2.2	2.2	2.2	2.2	2.2
41	1.1	2.4	2.4	2.4	2.4
42	2.6	0.1	0.1	0.1	5.0
43	5.0	5.0	5.0	5.0	5.0
44	2.6	2.6	2.6	2.6	2.6
45	5.1	5.1	5.1	5.1	5.1
46	5.1	5.1	5.1	5.1	5.1
47	5.0	5.0	5.0	5.0	5.0
48	0	0	0	0	0
49	4.1	4.1	4.1	4.1	4.1
50	5.1	5.1	4.5	5.1	5.1
51	---	---	---	---	---
52	5.1	5.1	5.1	5.1	5.1
53	---	---	---	---	---
54	---	---	---	---	---
55	---	---	---	---	---
56	5.2	5.2	5.2	5.2	5.2
57	3.0	3.0	3.0	3.0	3.0
58	2.4	2.4	2.4	2.4	2.4
59	2.6	2.6	2.6	2.6	2.6
60	2.6	2.6	2.6	2.6	2.6
61	2.6	2.6	2.6	2.6	2.6
62	2.6	2.6	2.6	2.6	2.6
63	2.6	2.6	2.6	2.6	2.6
64	2.6	2.6	2.6	2.6	2.6
65	0	0	0	0	0
66	1.2	1.2	1.2	1.2	1.2
67	2.6	2.6	2.6	2.6	2.6
68	2.6	2.6	2.6	2.6	2.6
69	0	0	0	0	0
70	2.6	2.6	2.6	2.6	2.6
71	2.6	2.6	0	2.6	2.6
72	5.1	5.1	5.1	5.1	5.1
73	2.6	2.6	2.6	2.6	2.6
74	0	0	0	0	0
75	2.6	2.6	2.6	2.6	2.6
76	0.5	0.5	0.5	0.5	0.5
77	0	0	0	0	0
78	5.1	5.1	5.1	5.1	5.1
79	0.1	0.1	0.1	0.1	0.1
80	2.6	2.6	2.6	2.6	2.6
81	5.1	5.1	5.1	5.1	5.1
82	5.1	5.1	5.1	5.1	5.1
83	5.1	5.1	5.1	5.1	5.1
84	0.2	0.2	0.2	0.2	0.2
85	3.7	3.7	5.1	3.7	3.7
86	5.2	5.2	5.2	5.2	5.2
87	5.2	5.2	5.2	5.2	5.2
88	5.2	5.2	5.2	5.2	5.2
89	5.2	5.2	5.2	5.2	5.2
90	5.2	5.2	5.2	5.2	5.2
91	5.2	5.2	5.2	5.2	5.2
92	5.0	5.0	5.0	5.0	5.0
93	1.4	1.4	1.4	1.4	1.4
94	5.2	5.2	5.2	5.2	5.2

2	0	0	0	0	0
3	1.3	1.3	1.3	1.3	1.3
4	---	---	---	---	---
IC6003					
1	0	0	0	0	0
2	1.3	1.3	1.3	1.3	1.3
3	0	0	0	0	0
4	---	---	---	---	---
Q1051					
E	12.0	12.0	12.0	12.0	12.0
C	13.2	13.2	13.2	13.2	13.2
B	12.6	11.6	12.6	12.6	12.6
Q1052					
E	0	0	0	0	0
C	12.6	11.6	12.6	12.6	12.6
B	0.7	0.7	0.7	0.7	0.7
Q6002					
E	12.1	12.1	12.1	12.1	12.1
C	0.5	12.1	0.5	0.5	0.5
B	12.1	11.2	12.1	12.1	12.1
Q6003					
E	0.4	1.1	0.4	0.4	0.4
C	12.1	11.2	12.1	12.1	12.1
B	0	5.0	0	0	0
Q6005					
E	5.1	5.1	5.1	5.1	5.1
C	5.1	5.1	5.1	5.1	5.1
B	4.4	4.4	4.4	4.4	4.4
Q6006					
E	0	0	0	0	0
C	0	0	0	0	0
B	0.8	0.8	0.8	0.8	0.8
Q6008					
E	0	0	0	0	0
C	5.0	5.0	5.0	5.0	5.0
B	0	0	0	0	0
Q6009					
E	0	0	0	0	0
C	5.1	5.1	5.1	5.1	5.1
B	---	---	---	---	---
Q6010					
E	0	0	0	0	0
C	5.1	5.1	5.1	5.1	5.1
B	---	---	---	---	---
TP1058	12.0	12.0	12.0	12.0	12.0
TP6001	---	---	---	---	---
TP6002	0.2	0.2	0.2	0.2	0.2
TP6003	3.4	3.4	3.0	3.4	3.4
TP6004	4.9	4.9	4.9	4.9	4.9
TP6005	5.1	5.1	5.1	5.1	5.1
TP6006	4.9	4.9	4.9	4.9	4.9
TP6009	---	---	---	---	---
TP6010	0	5.1	0	0	0
TP6008	0	0	0	0	0
TP6011	0	0	0	0	0
TP6013	0	0	0	0	0
TP6201	2.6	2.6	2.6	2.6	2.6
TP6202	1.9	2.2	2.2	2.6	2.6
TP6203	2.6	2.6	2.6	2.6	2.6
TP6204	1.2	1.2	1.2	1.2	1.2
TP6205	2.6	2.6	2.6	2.6	2.6
TP6206	0	3.0	0	0	0
TP6207	2.6	2.6	2.6	2.6	2.6
TP6208	2.5	2.5	2.5	2.5	2.5
TP6209	1.1	2.4	2.4	2.4	2.4
TP6210	0	0	0	0	0

UNLESS OTHERWISE SPECIFIED:
PNP TRANSISTORS IS
2SB709(R,S),
NPN TRANSISTORS IS
2SD601(R,S),
DIODES IS MA165
SWITCHES IS EVQ21309K AND
WATTAGE OF RESISTORS IS 1/10W.

MAIN II (SIGNAL PROCESS/AUDIO) SCHEMATIC DIAGRAM (B,C,D,F,G)

NOTE:
FOR SCHEMATIC
REFER TO BEGIN

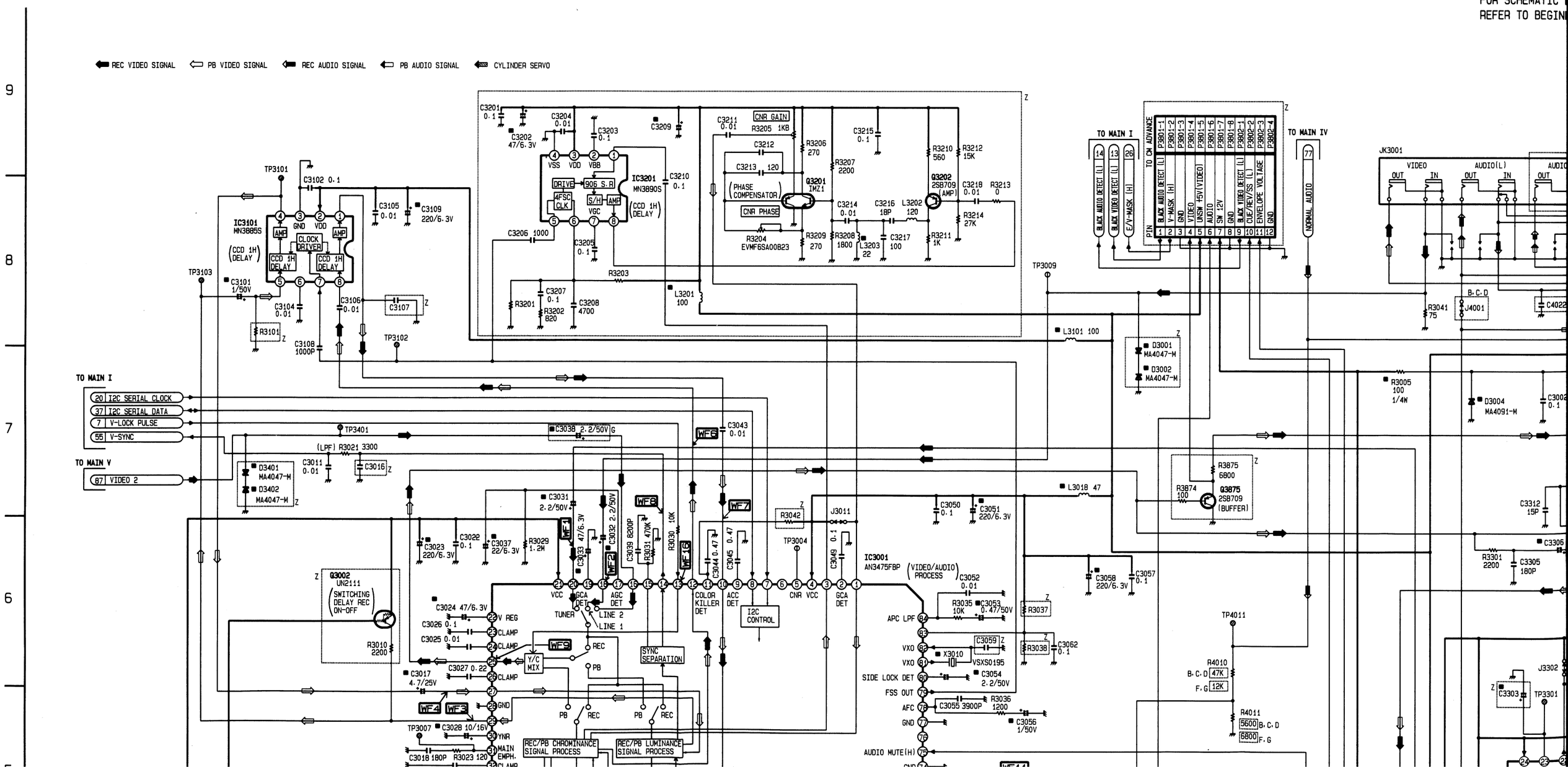

IC3001 Video/Audio Process IC-Block Diagram, AN3475FBP

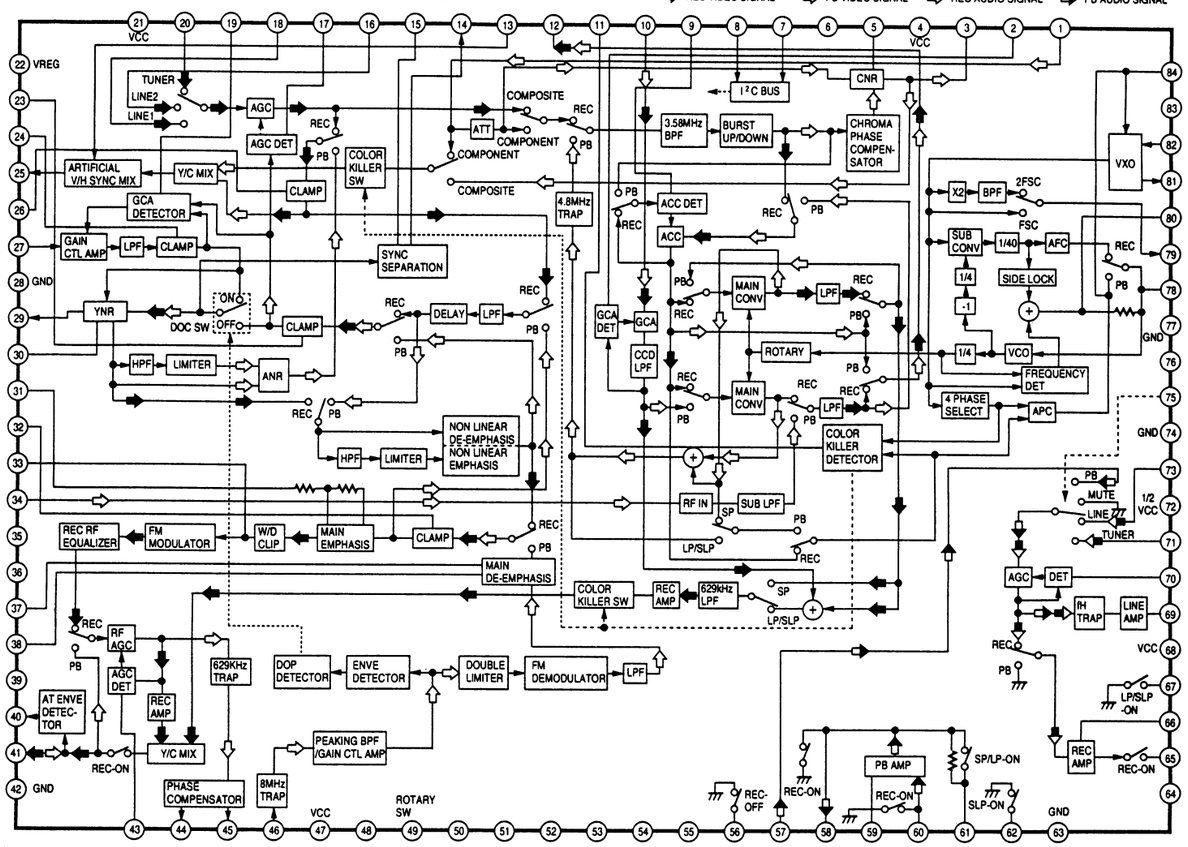

COMPARISON CHART OF MODELS & MARKS

MODEL	MARK
VHQ720	A
PV-7400	B
PV-7401	C
PV-7401-K	D
VHQ740	E
PV-7450	F
PV-7451	G
VHQ760	H
Not Used	Z

NOTE:
FOR SCHEMATIC DIAGRAM AND CIRCUIT BOARD LAYOUT NOTES, REFER TO BEGINNING OF SCHEMATIC SECTION.

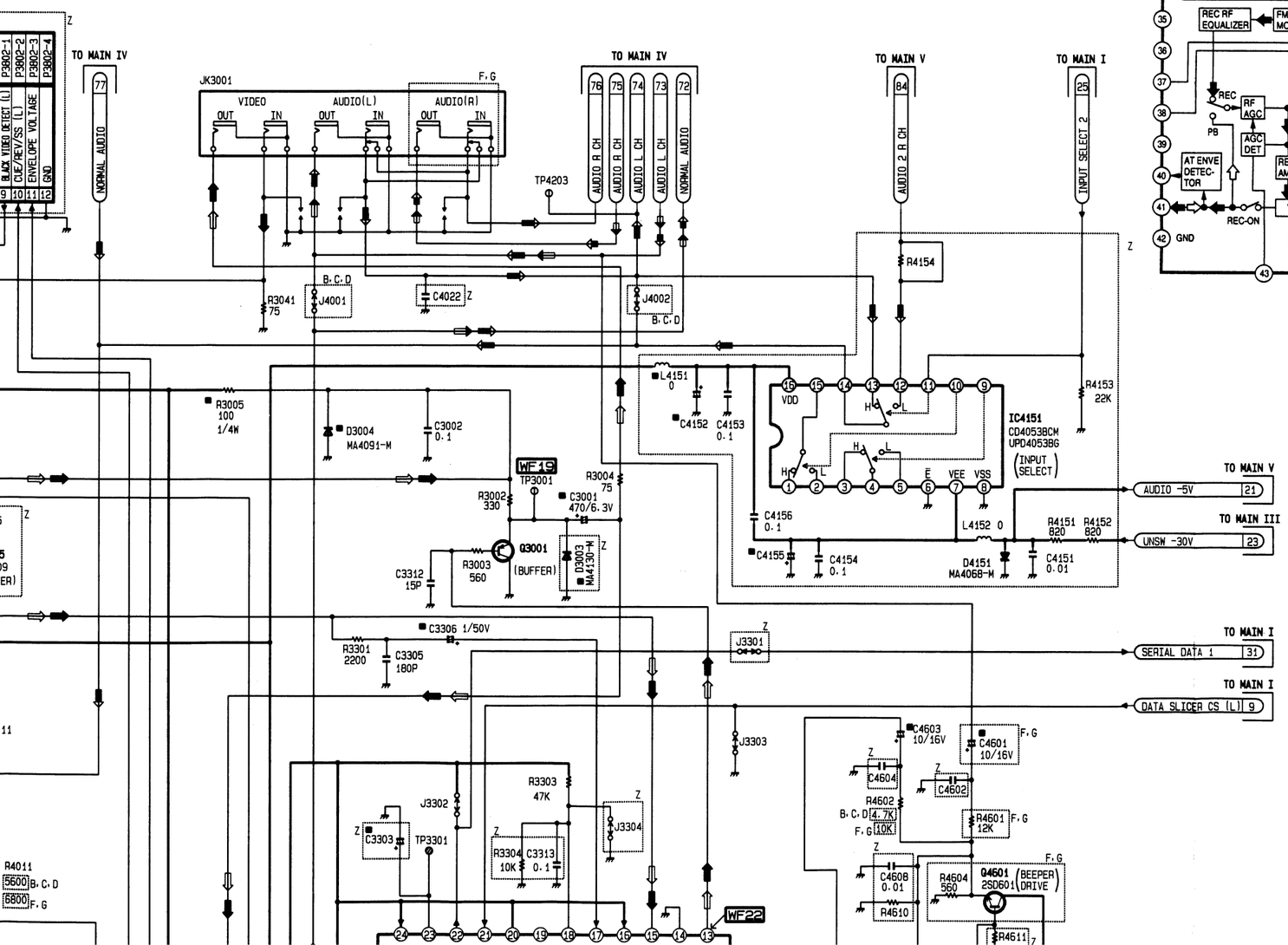

MAIN II VOLTAGE CHART

MODE / PIN NO.	REC	PLAY
IC3001		
1	5.1	5.1
2	3.3	3.3
3	2.1	2.1
4	5.1	5.1
5	4.3	4.3
6	---	---
7	4.2	4.2
8	4.0	4.0
9	2.2	2.2
10	2.8	2.8
11	0.8	0.8
12	2.8	2.8
13	0.4	0.4
14	0.5	0.5
15	1.0	1.0
16	3.1	3.9
17	2.3	1.8
18	3.1	3.1
19	2.6	2.6
20	3.1	3.4
21	5.1	5.1
22	2.0	2.0
23	2.5	2.5
24	2.4	2.4
25	2.0	2.0
26	2.5	2.5
27	2.0	2.0
28	0	0
29	1.9	1.9
30	0	0
31	2.0	2.4

MODE / PIN NO.	REC	PLAY
IC3301		
1	0	0
2	2.8	2.8
3	---	---
4	5.1	5.1
5	2.9	3.4
6	2.6	2.6
7	2.6	2.6
8	5.1	5.1
9	4.1	4.1
10	4.5	4.5
11	4.4	4.4
12	5.1	5.1
13	2.0	2.0
14	0	0
15	2.0	2.0
16	5.1	5.1
17	2.9	2.9
18	2.1	2.1
19	---	---
20	5.1	5.1
21	0	0
22	5.1	5.1
23	---	---
24	5.1	5.1
Q3001		
E	2.8	2.8
C	0	0
B	2.0	2.0
Q4001		
E	5.1	5.1

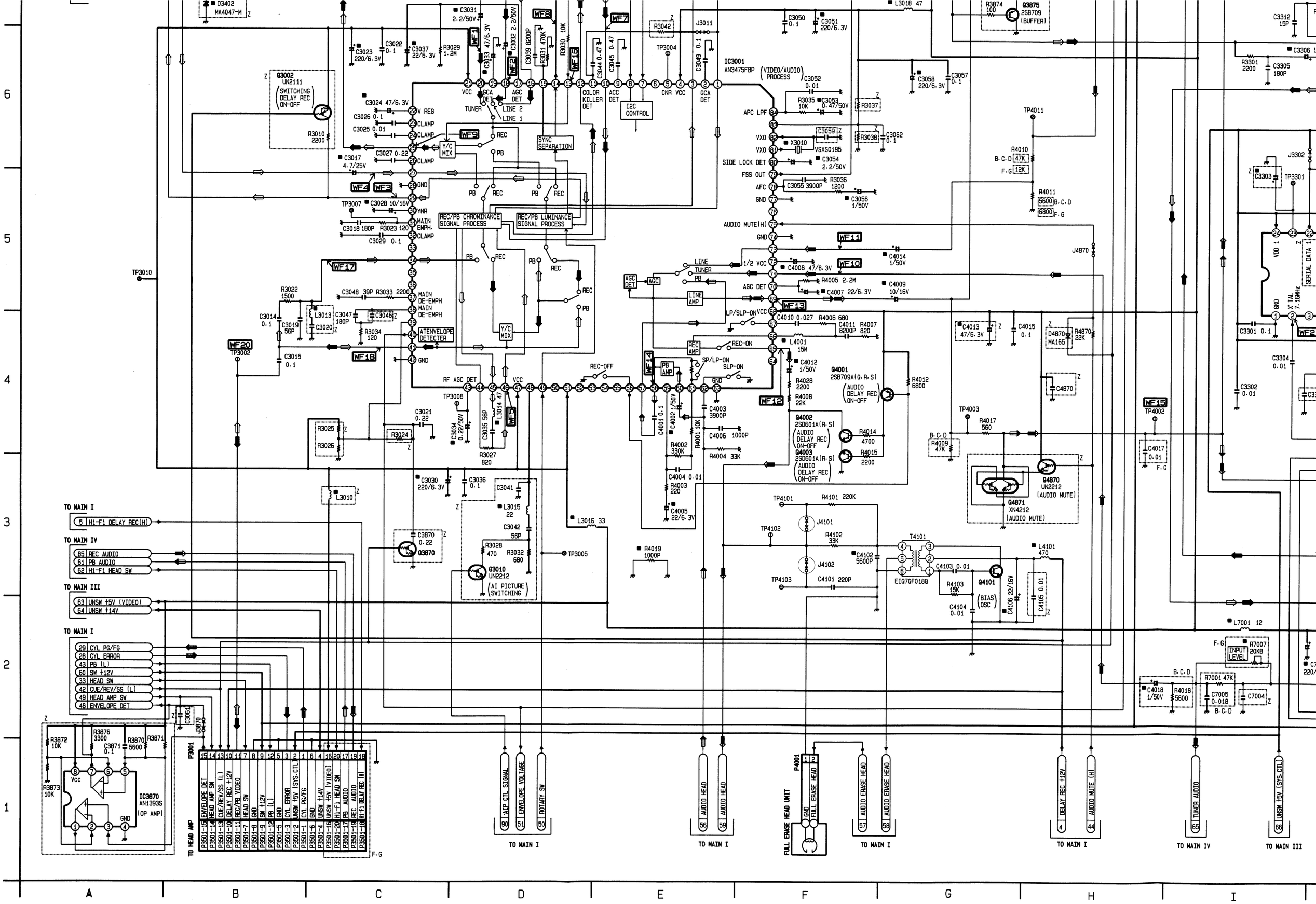
IC3001
AN3475FBP
(VIDEO/AUDIO PROCESS)
Q3002
UN2111
(SWITCHING DELAY REC ON-OFF)
Y/C MIX
SYNC SEPARATION
I2C CONTROL
REC/PB CHROMINANCE SIGNAL PROCESS
REC/PB LUMINANCE SIGNAL PROCESS
ATENVELOPE DETECTER
LINE AMP
PB AMP
REC AMP
Q4001
2SB709A(Q,R,S)
(AUDIO DELAY REC ON-OFF)
Q4002
2SD601A(R,S)
(AUDIO DELAY REC ON-OFF)
Q4003
2SD601A(R,S)
(AUDIO DELAY REC ON-OFF)
Q4870
UN2212
(AUDIO MUTE)
Q4871
XN4212
(AUDIO MUTE)
Q3870
Q3010
UN2212
(AI PICTURE SWITCHING)
Q4101
(BIAS OSC)
T4101
EIQ70FO18Q
IC3870
AN1393S
(OP AMP)
TO MAIN I
TO MAIN IV
TO MAIN III
TO HEAD AMP
FULL ERASE HEAD UNIT
AUDIO HEAD
AUDIO ERASE HEAD
DELAY REC +12V
AUDIO MUTE (H)
TUNER AUDIO
UNSW +5V (SYS.CTL)
ENVELOPE DET
ROTARY SW
CYL PG/FG
CYL ERROR
PB (L)
SW +12V
HEAD SW
CUE/REV/SS (L)
HEAD AMP SW
REC AUDIO
PB AUDIO
Hi-Fi HEAD SW
Hi-Fi DELAY REC (H)
INPUT LEVEL
R7007 20KB
R7001 47K
C7005 0.01B
C7004
C4018 1/50V
R4018 5600
L7001 12
X'TAL 7.16MHz
SERIAL DATA
VDD 1
GND
J3302
TP3301
J4870
TP4011
TP4002
TP4003
TP3010
TP3002
TP3005
TP4101
TP4102
TP4103
J4101
J4102
R4019 1000P
R4101 220K
R4102 33K
C4102 5600P
C4101 220P
C4103 0.01
R4103 15K
C4104 0.01
C4106 22/16V
C4105 0.01
L4101 470
L4001 15M
R4012 6800
R4014 4700
R4015 2200
R4017 560
R4009 47K
R4010 B.C.D 47K F.G 12K
R4011 5600 B.C.D 6800 F.G
R4870 22K
D4870 MA165
C4870
C4017 0.01 F.G
R3874 100
Q3875 2SB709 (BUFFER)
D3402 MA4047-M
P3001
P3501-15 ENVELOPE DET
P3501-14 HEAD AMP SW
P3501-13 CUE/REV/SS (L)
P3501-10 DELAY REC +12V
P3501-11 REC/PB VIDEO
P3501-7 HEAD SW
P3501-8 GND
P3501-9 SW +12V
P3501-12 PB (L)
P3501-5 GND
P3501-3 CYL ERROR
P3501-2 UNSW +5V (SYS.CTL)
P3501-1 CYL PG/FG
P3501-6 GND
P3501-4 UNSW +14V
P3501-16 UNSW +5V (VIDEO)
P3501-20 Hi-Fi HEAD SW
P3501-17 PB AUDIO
P3501-19 REC AUDIO
P3501-18 Hi-Fi DELAY REC (H)
F.G
A
B
C
D
E
F
G
H
I
6
5
4
3
2
1

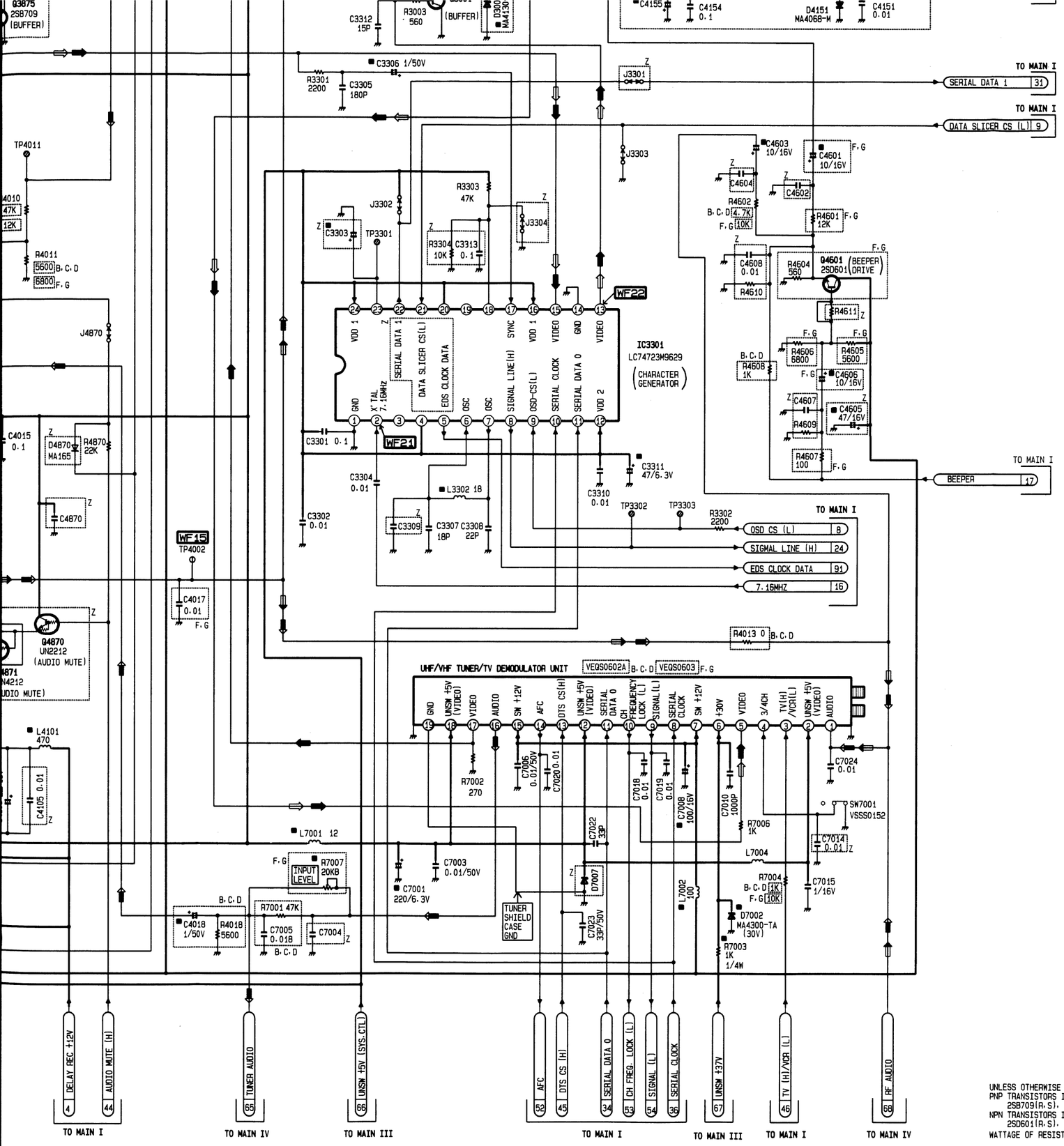

UNLESS OTHERWISE SPECIFIED:
PNP TRANSISTORS IS
2SB709(R.S).
NPN TRANSISTORS IS
2SD601(R.S).
WATTAGE OF RESISTORS IS 1/10W.

9	2.2	2.2
10	2.8	2.8
11	0.8	0.8
12	2.8	2.8
13	0.4	0.4
14	0.5	0.5
15	1.0	1.0
16	3.1	3.9
17	2.3	1.8
18	3.1	3.1
19	2.6	2.6
20	3.1	3.4
21	5.1	5.1
22	2.0	2.0
23	2.5	2.5
24	2.4	2.4
25	2.0	2.0
26	2.5	2.5
27	2.0	2.0
28	0	0
29	1.9	1.9
30	0	0
31	2.0	2.4
32	2.4	2.4
33	2.0	1.2
34	3.0	2.8
35	2.6	2.6
36	---	---
37	0	1.5
38	4.6	2.2
39	2.4	2.0
40	3.8	5.1
41	2.8	3.6
42	0	0
43	3.4	3.4
44	2.6	2.6
45	2.6	2.6
46	2.6	2.6
47	5.1	5.1
48	1.2	1.0
49	2.6	2.6
50	---	---
51	5.1	5.1
52	---	---
53	---	---
54	---	---
55	---	---
56	5.1	0
57	0.8	2.6
58	2.6	2.6
59	2.6	2.6
60	2.6	2.6
61	2.6	2.6
62	0	0
63	0	0
64	---	---
65	2.6	2.6
66	2.6	2.6
67	2.6	2.6
68	5.1	5.1
69	2.7	2.7
70	0	0
71	2.6	2.6
72	2.6	2.6
73	2.6	2.6
74	0	0
75	0	0
76	---	---
77	0	0
78	2.1	2.1
79	3.0	3.0
80	2.1	2.1
81	2.5	2.5
82	2.8	2.8
83	2.6	2.6
84	2.5	2.5
IC3101		
1	3.4	3.4
2	5.1	5.1
3	0	0
4	3.2	3.2
5	2.9	3.4
6	-2.7	-2.7
7	2.1	2.1
8	3.0	3.0

9	4.1	4.1
10	4.5	4.5
11	4.4	4.4
12	5.1	5.1
13	2.0	2.0
14	0	0
15	2.0	2.0
16	5.1	5.1
17	2.9	2.9
18	2.1	2.1
19	---	---
20	5.1	5.1
21	0	0
22	5.1	5.1
23	---	---
24	5.1	5.1
Q3001		
E	2.8	2.8
C	0	0
B	2.0	2.0
Q4001		
E	5.1	5.1
C	-18.7	5.1
B	5.1	4.4
Q4002		
E	-13.6	0
C	0	0
B	-19.1	0.8
Q4003		
E	-13.6	0
C	0	0
B	-18.6	0.8
Q4101		
E	0	0
C	11.3	0.5
B	0.2	0.5
Q4601		
E	5.8	5.8
C	12.0	12.0
B	6.4	6.4
TP3001	2.8	2.8
TP3002	2.7	2.3
TP3004	4.3	4.3
TP3005	2.6	2.6
TP3007	2.1	2.1
TP3008	3.4	3.4
TP3009	0	0
TP3010	5.1	5.1
TP3101	3.2	3.2
TP3103	1.8	1.8
TP3302	5.1	5.1
TP3303	4.1	4.1
TP3401	0	0
TP4002	0	0
TP4003	0	0
TP4011	0	0
TP4101	0	0
TP4102	0	0
TP4103	0	0
TP4203	0	0

MAIN III (POWER SUPPLY) SCHEMATIC DIAGRAM

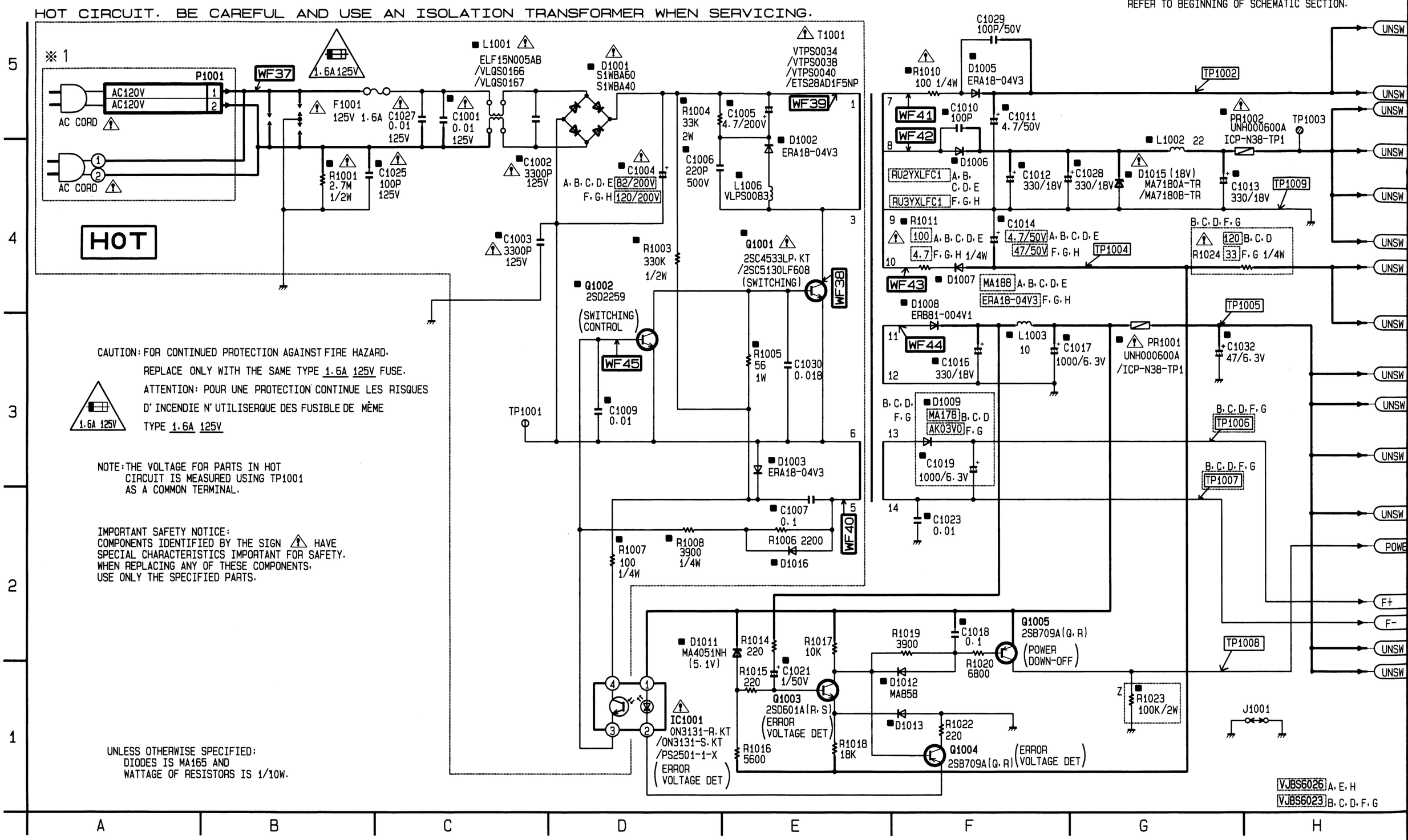

NOTE:
FOR SCHEMATIC DIAGRAM AND CIRCUIT BOARD LAYOUT NOTES,
REFER TO BEGINNING OF SCHEMATIC SECTION.

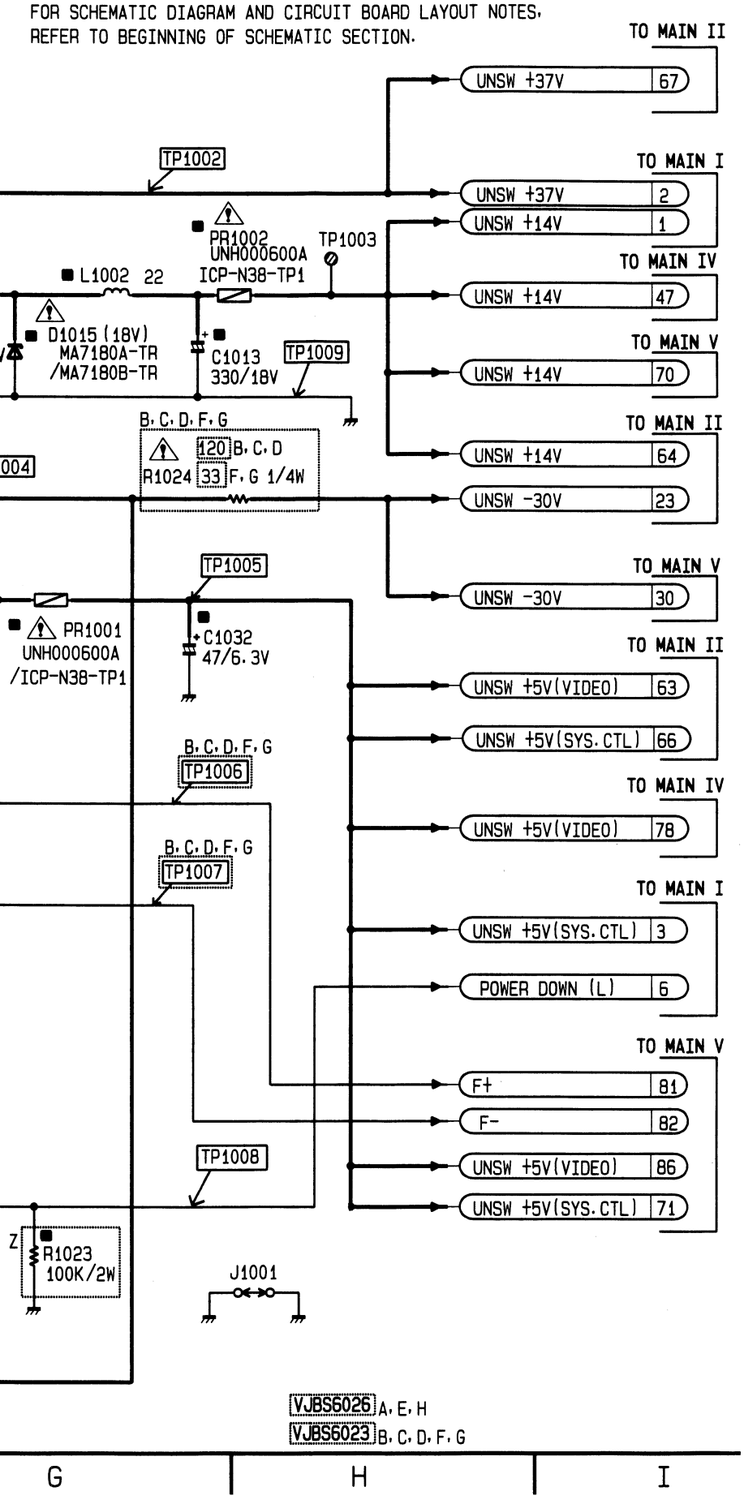

※ 1 AC cord replacement note for models PV-7400 and PV-7401:
Either Type-A or B is used as a AC cord for these models. However, for parts standardization and interchangeability, Type-B will be supplied with Connector P1001 as a kit (Part No.: VJAS0195-FS) for replacement. When replacing AC cord on products using Type-A, connect Connector P1001 to Main C.B.A. with solder and connect AC cord to Connector P1001.

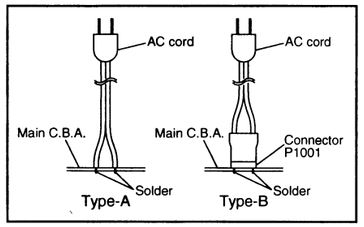

COMPARISON CHART
OF MODELS & MARKS

MODEL	MARK
VHQ720	A
PV-7400	B
PV-7401	C
PV-7401-K	D
VHQ740	E
PV-7450	F
PV-7451	G
VHQ760	H
Not Used	Z

MAIN III VOLTAGE CHART

MODE / PIN NO.	REC	PLAY
IC1001		
1	5.1	5.1
2	4.4	4.4
3	-54.0	-54.0
4	-53.8	-53.8
Q1001		
E	0	0
C	133.5	133.5
B	0.3	0.3
Q1002		
E	0	0
C	0.3	0.3
B	0.6	0.6
Q1003		
E	-0.6	-0.6
C	4.1	4.1
B	0	0
Q1004		
E	4.4	4.4
C	0.1	0.1
B	4.1	4.1
Q1005		
E	5.1	5.1
C	5.2	5.2
B	4.7	4.7
TP1001	0	0
TP1002	36.5	36.5
TP1003	13.5	13.5
TP1004	-30.0	-30.0
TP1005	0	0
TP1006	-18.9	-18.9
TP1007	-24.2	-24.2
TP1008	5.1	5.1
TP1009	0	0

MAIN IV (Hi-Fi) SCHEMATIC DIAGRAM (F,G,H)

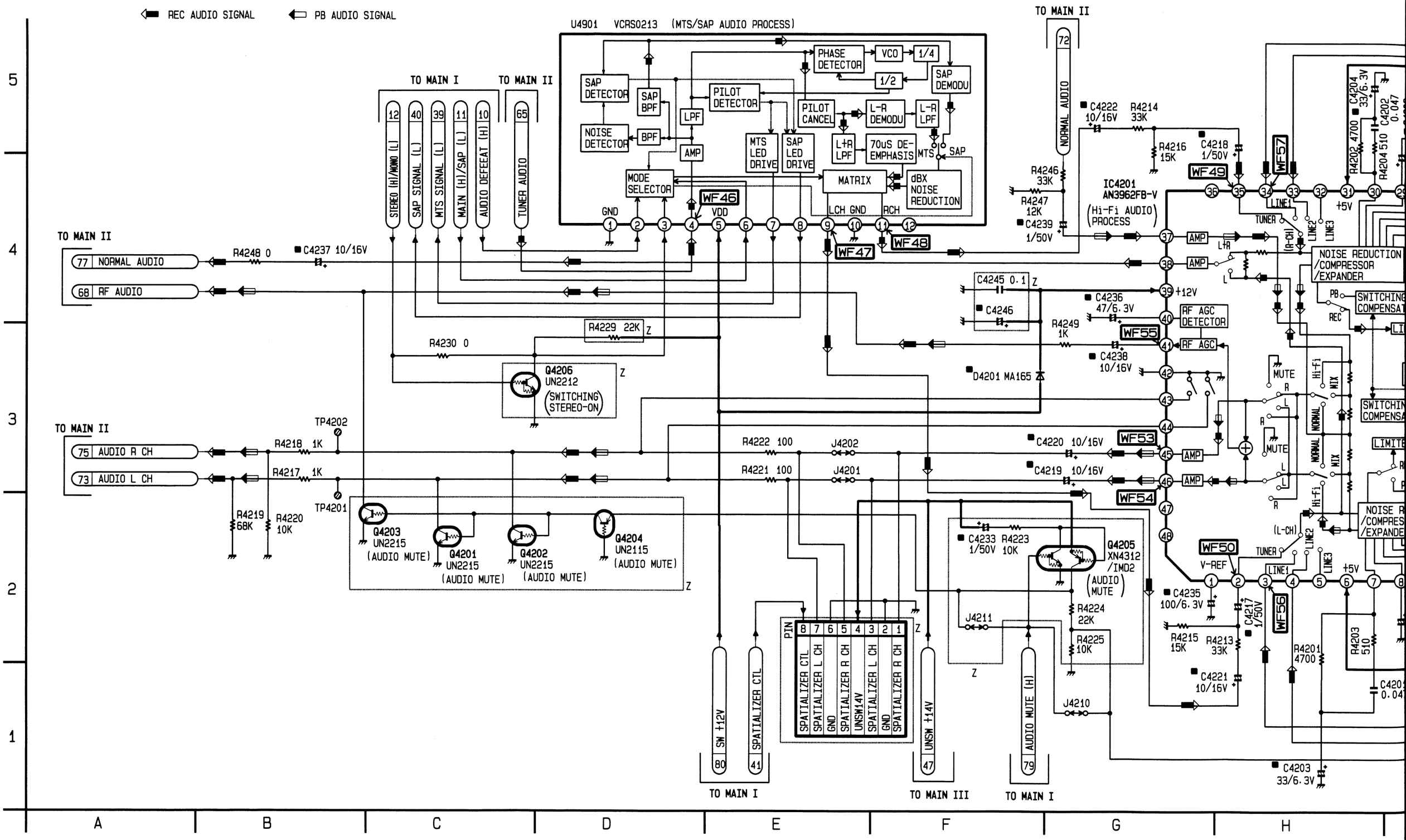

NOTE:
FOR SCHEMATIC DIAGRAM AND CIRCUIT BOARD LAYOUT NOTES,
REFER TO BEGINNING OF SCHEMATIC SECTION.

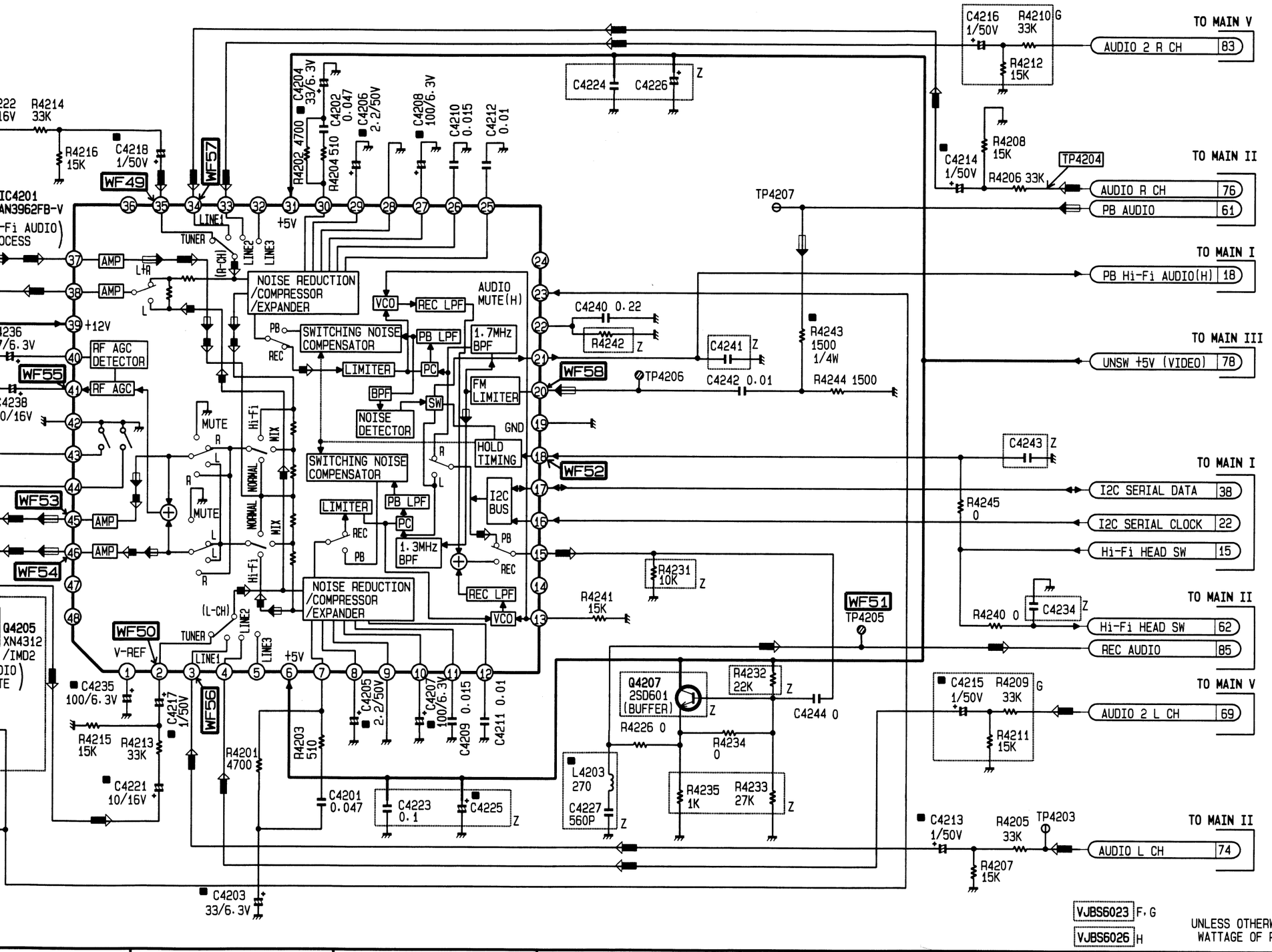

VJBS6023 F, G
VJBS6026 H

UNLESS OTHERWISE SPECIFIED;
WATTAGE OF RESISTORS IS 1/10W.

COMPARISON CHART
OF MODELS & MARKS

MODEL	MARK
VHQ720	A
PV-7400	B
PV-7401	C
PV-7401-K	D
VHQ740	E
PV-7450	F
PV-7451	G
VHQ760	H
Not Used	Z

MAIN IV VOLTAGE CHART

MODE / PIN NO.	REC	PLAY
IC4201		
1	2.6	2.6
2	2.6	2.6
3	2.6	2.6
4	2.6	2.6
5	---	---
6	5.1	5.1
7	2.6	2.6
8	2.6	2.6
9	0	0
10	2.6	2.6
11	2.6	2.6
12	2.6	2.6
13	2.6	2.6
14	---	---
15	2.6	2.6
16	4.2	4.2
17	4.0	4.0
18	0	0
19	2.6	2.6
20	2.6	2.6
21	0	0
22	0	0
23	0	0
24	---	---
25	0	0
26	2.6	2.6
27	2.6	2.6
28	0	0
29	1.6	1.6
30	2.7	2.7
31	0.1	0.1
32	---	---
33	2.6	0

MODE / PIN NO.	REC	PLAY
34	2.6	2.6
35	2.6	2.6
36	---	---
37	2.6	2.6
38	2.6	2.6
39	11.3	11.3
40	0.5	0.5
41	6.2	6.2
42	0	0
43	0	0
44	0	0
45	6.2	6.2
46	6.2	6.2
47	---	---
48	---	---
TP4201	0	0
TP4202	0	0
TP4203	0	0
TP4204	0	0
TP4205	2.7	2.7
TP4206	2.7	2.7
TP4207	0	0

MAIN V (OPERATION) SCHEMATIC DIAGRAM (B,C,D,F,G)

IC6301 KEY MATRIX

KEY DATA IN	SCAN		
	SCAN 0 (PIN 18)	SCAN 1 (PIN 19)	SCAN 2 (PIN 20)
KEY DATA 0 (PIN 9)	-----	REC/TIME	-----
KEY DATA 1 (PIN 10)	CH UP	POWER	CH DOWN
KEY DATA 2 (PIN 11)	-----	STOP /EJECT	FF/CUE
KEY DATA 3 (PIN 12)	TV/VCR	REW /REVIEW	PLAY

NOTE:
FOR SCHEMATIC DIAGRAM AND CIRCUIT BOARD LAYOUT NOTES, REFER TO BEGINNING OF SCHEMATIC SECTION.

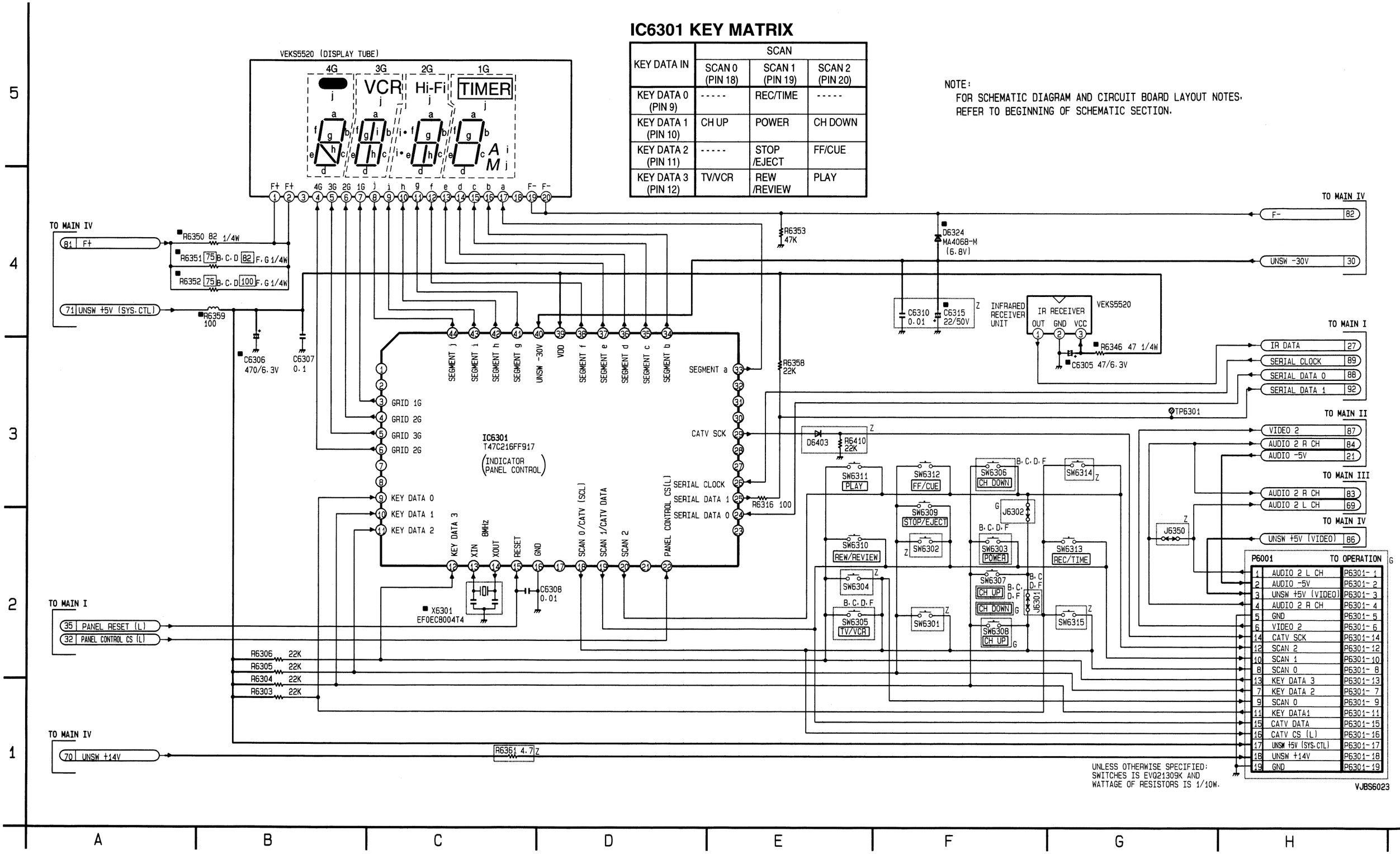

RCUIT BOARD LAYOUT NOTES.
TIC SECTION.

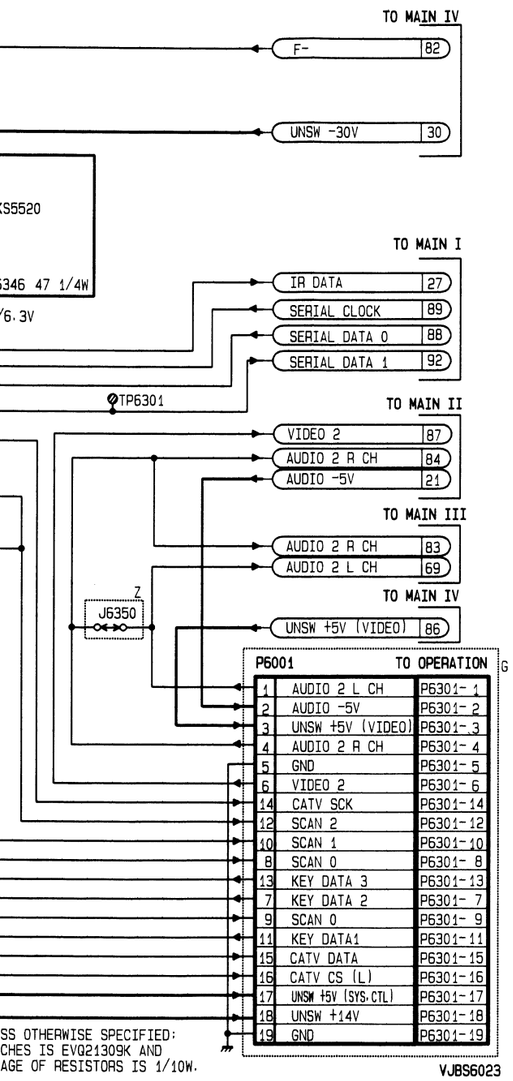

MAIN V VOLTAGE CHART

MODE / PIN NO.	REC	PLAY
IC6301		
1	---	---
2	---	---
3	-26.5	-26.5
4	-26.5	-26.5
5	-26.5	-26.5
6	-26.5	-26.5
7	---	---
8	---	---
9	5.2	5.2
10	5.2	5.2
11	5.2	5.2
12	5.2	5.2
13	2.3	2.3
14	2.6	2.5
15	5.1	5.1
16	0	0
17	---	---
18	2.0	1.9
19	2.0	1.8
20	2.1	2.1
21	---	---
22	1.3	1.3
23	---	---
24	0	4.7
25	5.1	5.2
26	4.7	4.7
27	---	---
28	---	---
29	-31.0	5.0
30	---	---
31	---	---
32	---	---
33	-18.0	-21.9
34	-26.3	-18.0
35	-30.5	-21.7
36	-21.8	-21.6
37	-17.5	-17.5
38	-17.5	-13.5
39	5.2	5.2
40	-31.0	-31.0
41	-21.7	-17.2
42	-26.1	-30.5
43	-26.0	-30.5
44	-21.7	-30.5
TP6301	5.2	5.2

COMPARISON CHART OF MODELS & MARKS

MODEL	MARK
VHQ720	A
PV-7400	B
PV-7401	C
PV-7401-K	D
VHQ740	E
PV-7450	F
PV-7451	G
VHQ760	H
Not Used	Z

—MEMO—

UHF/VHF TUNER/TV DEMODULATOR SCHEMATIC DIAGRAM

"FOR REFERENCE ON

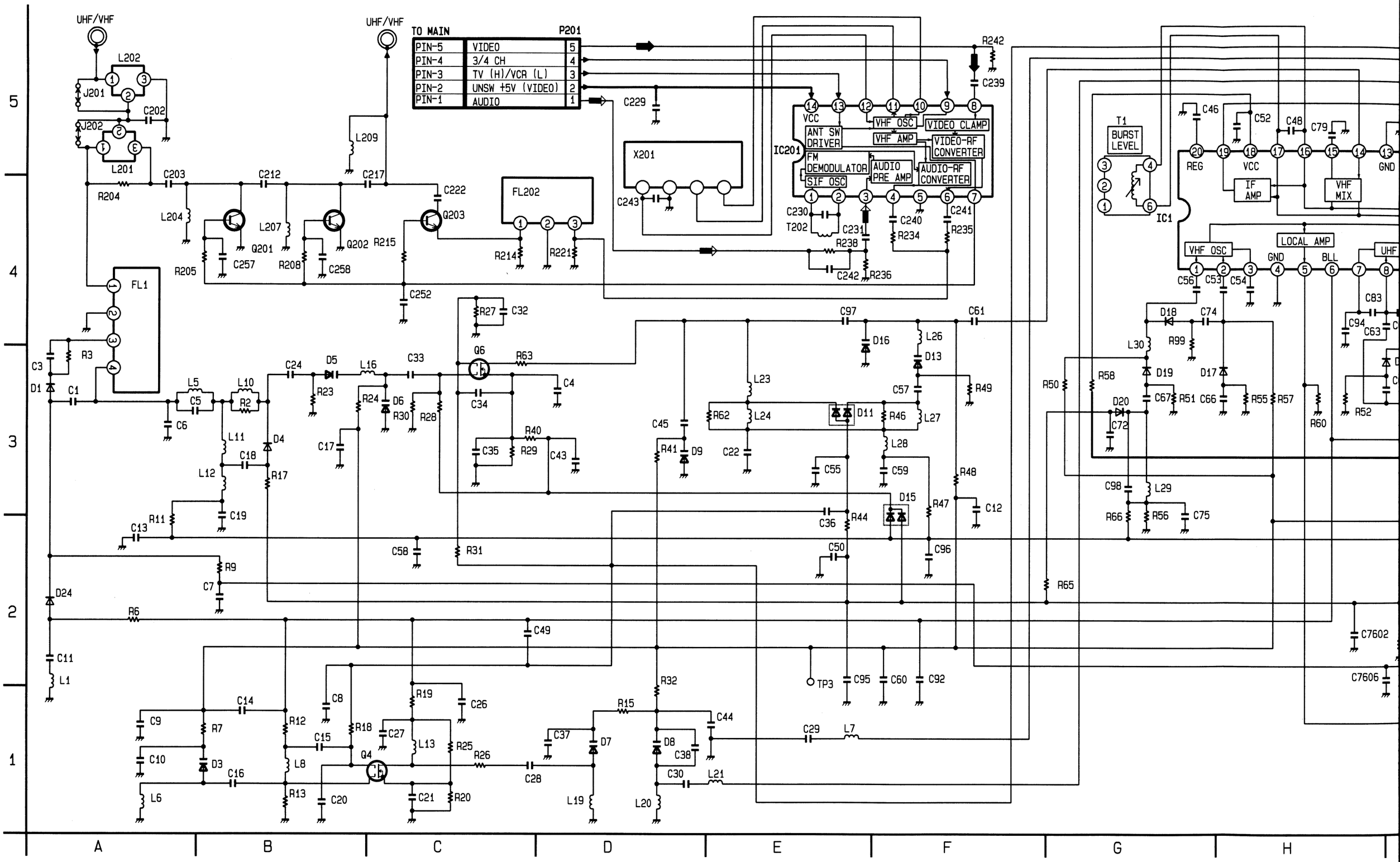

"FOR REFERENCE ONLY"

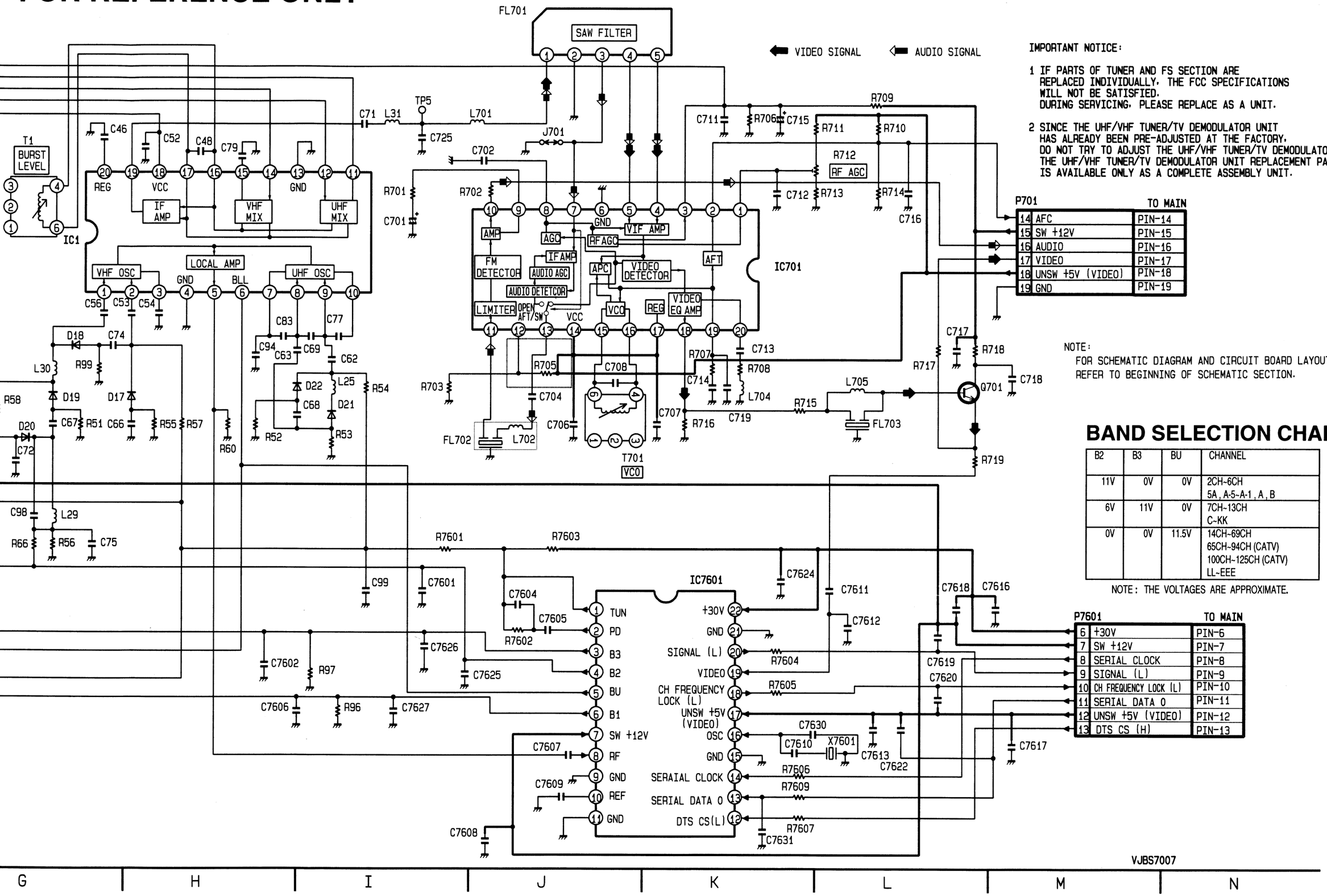

IMPORTANT NOTICE:

1 IF PARTS OF TUNER AND FS SECTION ARE REPLACED INDIVIDUALLY, THE FCC SPECIFICATIONS WILL NOT BE SATISFIED. DURING SERVICING, PLEASE REPLACE AS A UNIT.

2 SINCE THE UHF/VHF TUNER/TV DEMODULATOR UNIT HAS ALREADY BEEN PRE-ADJUSTED AT THE FACTORY, DO NOT TRY TO ADJUST THE UHF/VHF TUNER/TV DEMODULATOR UNIT. THE UHF/VHF TUNER/TV DEMODULATOR UNIT REPLACEMENT PART IS AVAILABLE ONLY AS A COMPLETE ASSEMBLY UNIT.

NOTE:
FOR SCHEMATIC DIAGRAM AND CIRCUIT BOARD LAYOUT NOTES, REFER TO BEGINNING OF SCHEMATIC SECTION.

BAND SELECTION CHART

B2	B3	BU	CHANNEL
11V	0V	0V	2CH~6CH 5A, A-5~A-1, A, B
6V	11V	0V	7CH~13CH C~KK
0V	0V	11.5V	14CH~69CH 65CH~94CH (CATV) 100CH~125CH (CATV) LL~EEE

NOTE: THE VOLTAGES ARE APPROXIMATE.

HEAD AMP SCHEMATIC DIAGRAM (A)

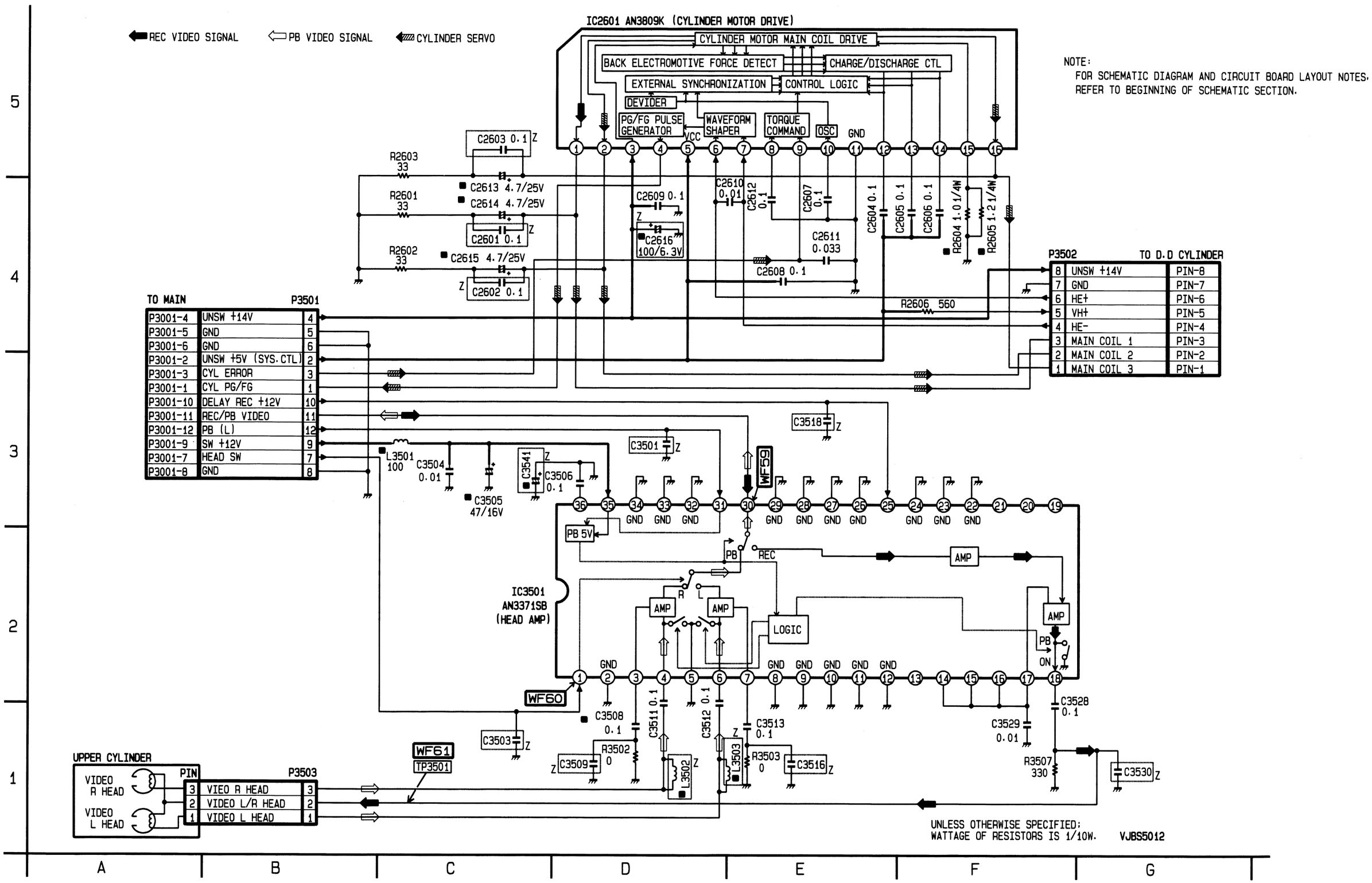

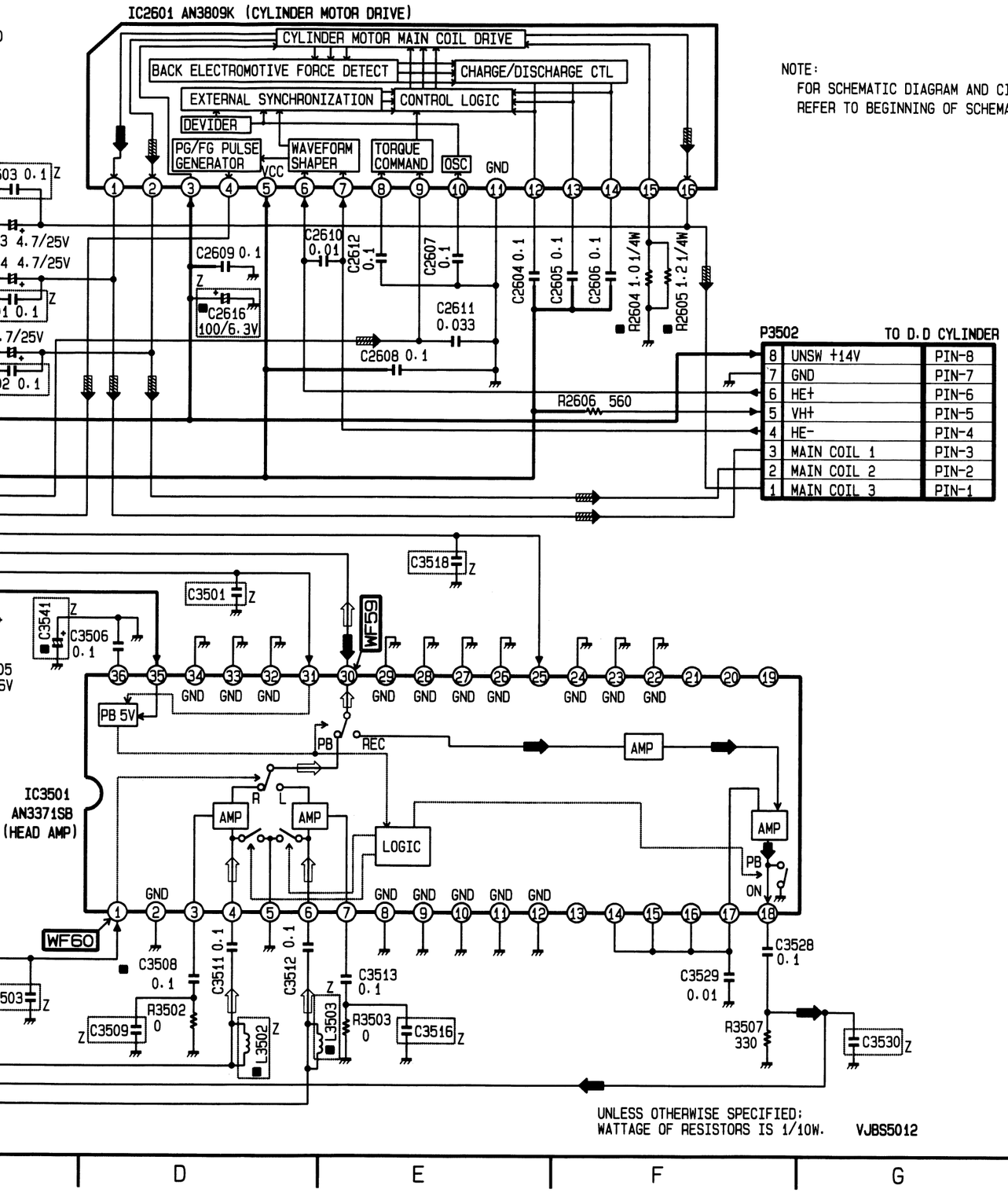

NOTE:
FOR SCHEMATIC DIAGRAM AND CIRCUIT BOARD LAYOUT NOTES, REFER TO BEGINNING OF SCHEMATIC SECTION.

UNLESS OTHERWISE SPECIFIED:
WATTAGE OF RESISTORS IS 1/10W. VJBS5012

D E F G

HEAD AMP VOLTAGE CHART

MODE / PIN NO.	STOP	REC	PLAY	FF	REW
IC2601					
1	13.0	13.0	13.0	13.0	13.0
2	13.0	13.0	13.0	13.0	13.0
3	13.5	13.5	13.5	13.5	13.5
4	1.2	1.2	1.2	1.2	1.2
5	5.1	5.1	5.1	5.1	5.1
6	0.9	0.9	0.9	0.9	0.9
7	1.0	1.0	1.0	1.0	1.0
8	0.7	0.7	0.7	0.7	0.7
9	2.6	2.6	2.6	2.6	2.6
10	1.5	1.5	1.5	1.5	1.5
11	0	0	0	0	0
12	3.9	3.9	3.9	3.9	3.9
13	3.9	3.9	3.9	3.9	3.9
14	3.9	3.9	3.9	3.9	3.9
15	0.1	0.1	0.1	0.1	0.1
16	13.2	13.2	13.2	13.2	13.2
IC3501					
1	2.6	2.6	2.6	2.6	2.6
2	0	0	4.2	0	0
3	0.3	0.3	1.4	0.3	0.3
4	0	0	0.7	0	0
5	0	0	0	0	0
6	0	0	0.7	0	0
7	0.2	0.2	1.4	0.2	0.2
8	0	0	0	0	0
9	0	0	0	0	0
10	0.2	0.2	2.2	0.2	0.2
11	0	0	0	0	0
12	0	0	0	0	0
13	---	---	---	---	---
14	0.2	0.2	2.2	0.2	0.2
15	---	---	---	---	---
16	0	6.3	0	0	0
17	0	6.3	0	0	0
18	0	6.3	0	0	0
19	---	---	---	---	---
20	---	---	---	---	---
21	---	---	---	---	---
22	0	0	0	0	0
23	0	0	0	0	0
24	0	0	0	0	0
25	0.5	11.9	0.5	0.5	0.5
26	0	0	0	0	0
27	0	0	0	0	0
28	0	0	0	0	0
29	0	0	0	0	0
30	2.7	2.7	2.3	2.7	2.7
31	5.1	5.1	0.1	5.1	5.1
32	0	0	0	0	0
33	0	0	0	0.2	0.2
34	0	0	0	0	0
35	12.0	12.0	12.0	12.0	12.0
36	0.1	0.1	5.0	0.1	0.1
TP3501	0	0	0	0	0

COMPARISON CHART OF MODELS & MARKS

MODEL	MARK
VHQ720	A
PV-7400	B
PV-7401	C
PV-7401-K	D
VHQ740	E
PV-7450	F
PV-7451	G
VHQ760	H
Not Used	Z

HEAD AMP SCHEMATIC DIAGRAM (B,C,D,E)

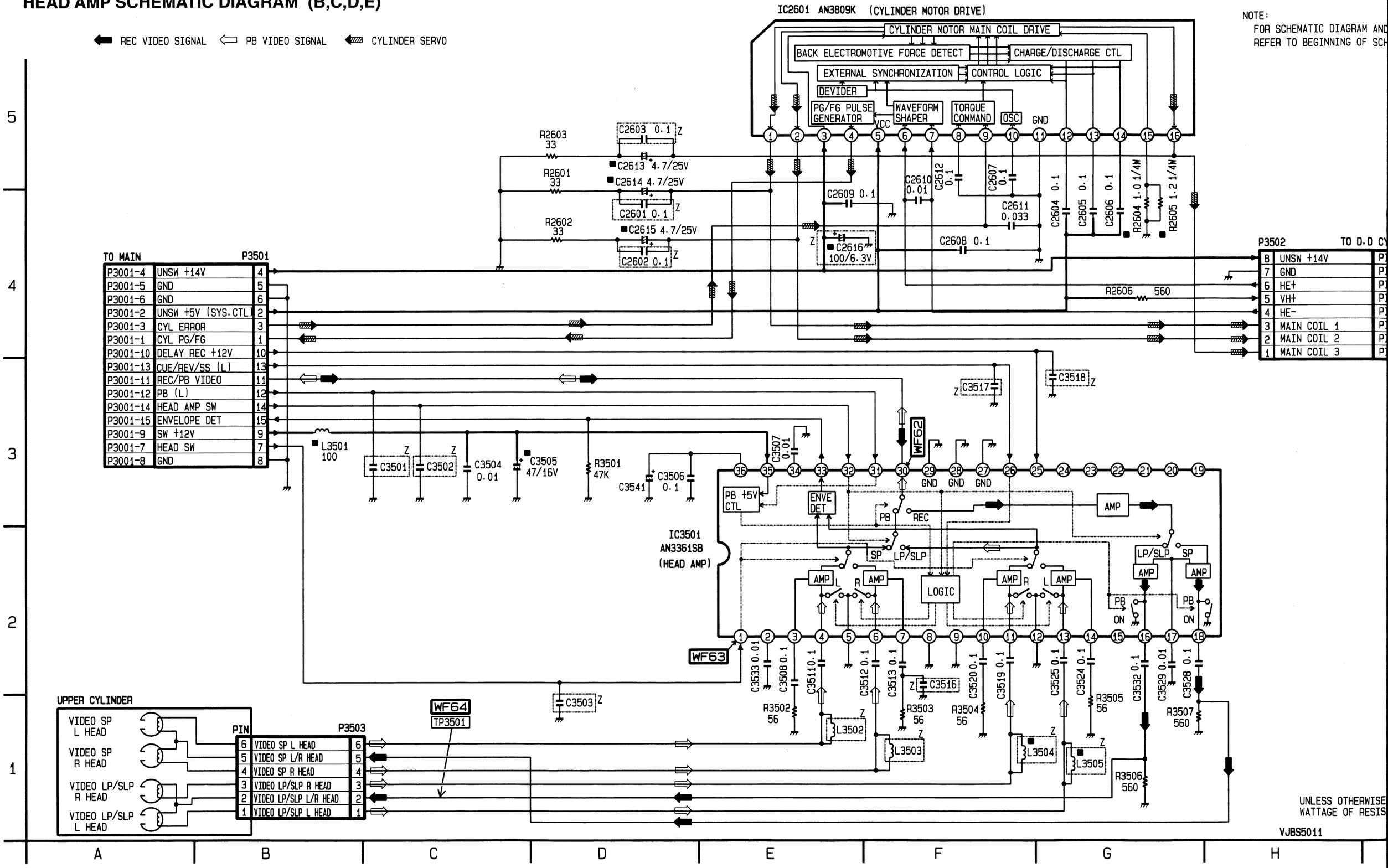

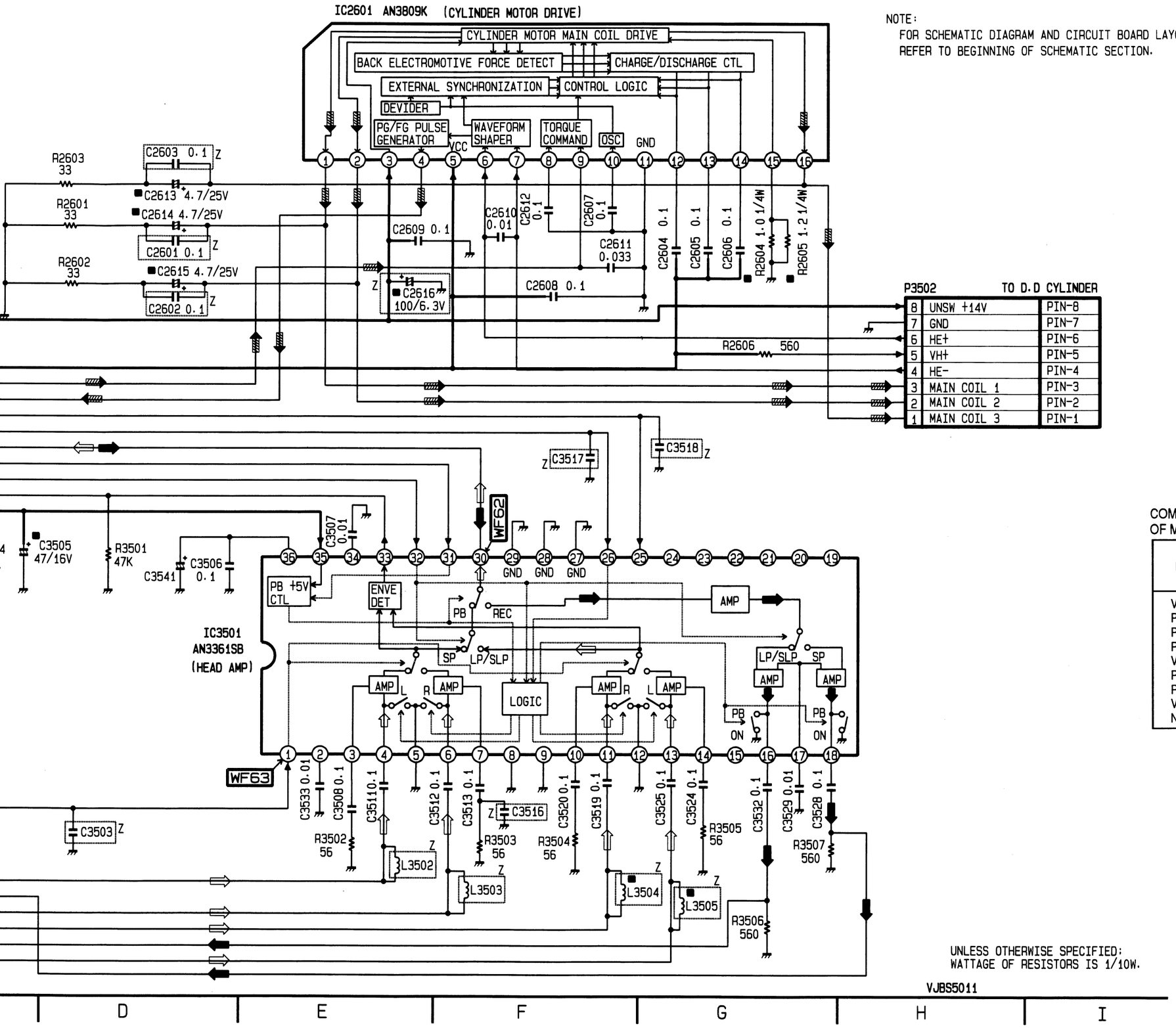

NOTE:
FOR SCHEMATIC DIAGRAM AND CIRCUIT BOARD LAYOUT NOTES, REFER TO BEGINNING OF SCHEMATIC SECTION.

HEAD AMP VOLTAGE CHART

MODE / PIN NO.	STOP	REC	PLAY	FF	REW
IC2601					
1	13.0	13.0	13.0	13.0	13.0
2	13.0	13.0	13.0	13.0	13.0
3	13.5	13.5	13.5	13.5	13.5
4	1.2	1.2	1.2	1.2	1.2
5	5.1	5.1	5.1	5.1	5.1
6	0.9	0.9	0.9	0.9	0.9
7	1.0	1.0	1.0	1.0	1.0
8	0.7	0.7	0.7	0.7	0.7
9	2.6	2.6	2.6	2.6	2.6
10	1.5	1.5	1.5	1.5	1.5
11	0	0	0	0	0
12	3.9	3.9	3.9	3.9	3.9
13	3.9	3.9	3.9	3.9	3.9
14	3.9	3.9	3.9	3.9	3.9
15	0.1	0.1	0.1	0.1	0.1
16	13.2	13.2	13.2	13.2	13.2
IC3501					
1	2.6	2.6	2.6	2.6	2.6
2	0	0	4.2	0	0
3	0.3	0.3	1.4	0.3	0.3
4	0	0	0.7	0	0
5	0	0	0	0	0
6	0	0	0.7	0	0
7	0.2	0.2	1.4	0.2	0.2
8	0	0	0	0	0
9	0	0	0	0	0
10	0.2	0.2	2.2	0.2	0.2
11	0	0	0	0	0
12	0	0	0	0	0
13	0	0	0	0	0
14	0.2	0.2	2.2	0.2	0.2
15	---	---	---	---	---
16	0	6.3	0	0	0
17	0	6.3	0	0	0
18	0	6.3	0	0	0
19	---	---	---	---	---
20	---	---	---	---	---
21	---	---	---	---	---
22	---	---	---	---	---
23	---	---	---	---	---
24	---	---	---	---	---
25	0.5	11.9	0.5	0.5	0.5
26	5.0	5.0	5.0	5.0	5.0
27	0	0	0	0	0
28	0	0	0	0	0
29	0	0	0	0	0
30	2.7	2.7	2.3	2.7	2.7
31	5.1	5.1	0.1	5.1	5.1
32	0.1	01	0.1	0.1	0.1
33	0	0	0	0.2	0.2
34	0.1	0.1	0.7	0.1	0.1
35	12.0	12.0	12.0	12.0	12.0
36	0.1	0.1	5.0	0.1	0.1
TP3501	0	0	0	0	0

COMPARISON CHART OF MODELS & MARKS

MODEL	MARK
VHQ720	A
PV-7400	B
PV-7401	C
PV-7401-K	D
VHQ740	E
PV-7450	F
PV-7451	G
VHQ760	H
Not Used	Z

UNLESS OTHERWISE SPECIFIED:
WATTAGE OF RESISTORS IS 1/10W.

Hi-Fi AUDIO/VIDEO HEAD AMP SCHEMATIC DIAGRAM (F,G,H)

REC VIDEO SIGNAL | PB VIDEO SIGNAL | REC AUDIO SIGNAL | PB AUDIO SIGNAL | CYLINDER SERVO

NOTE:
FOR S
REFER

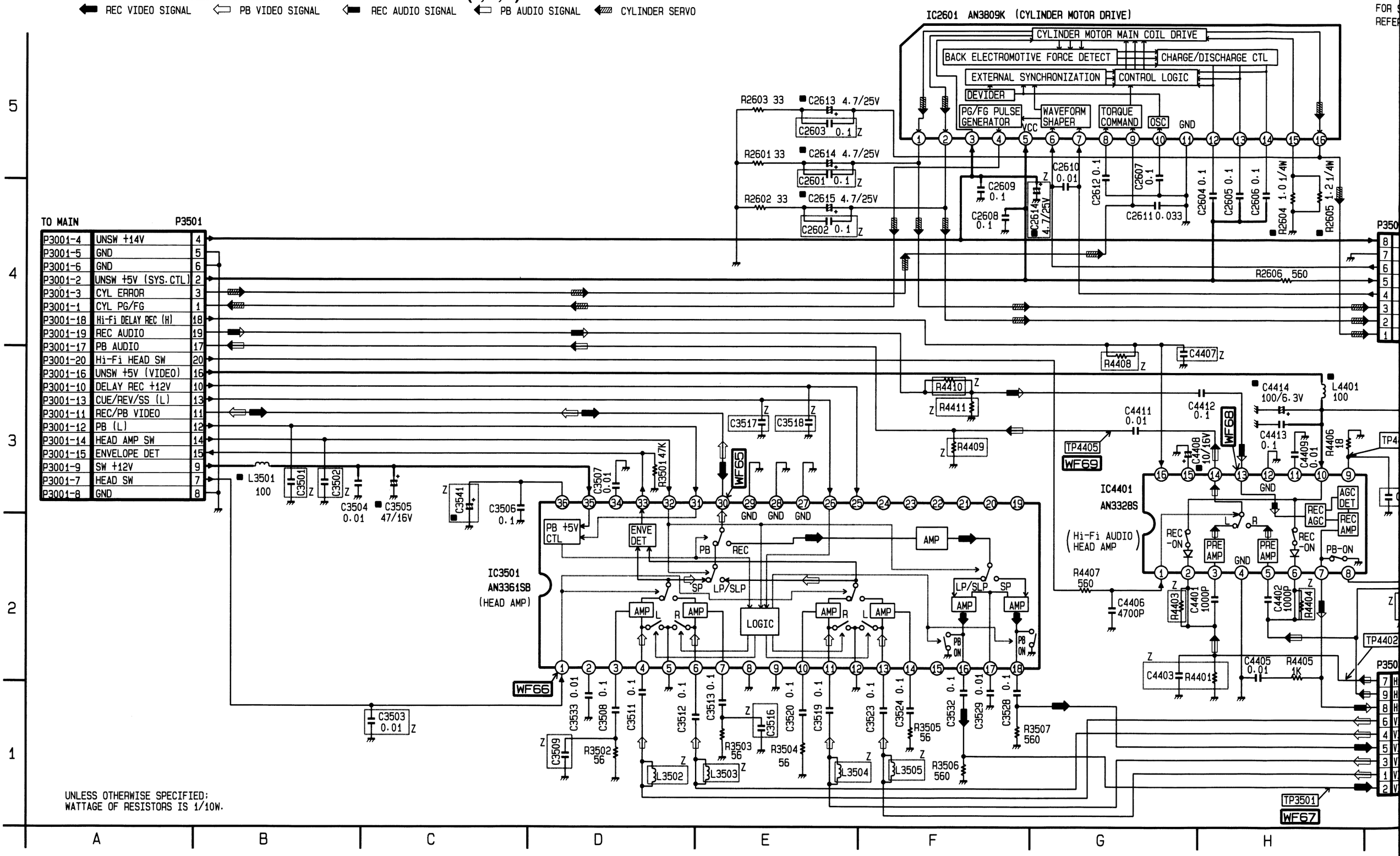

F,G,H)

PB AUDIO SIGNAL CYLINDER SERVO

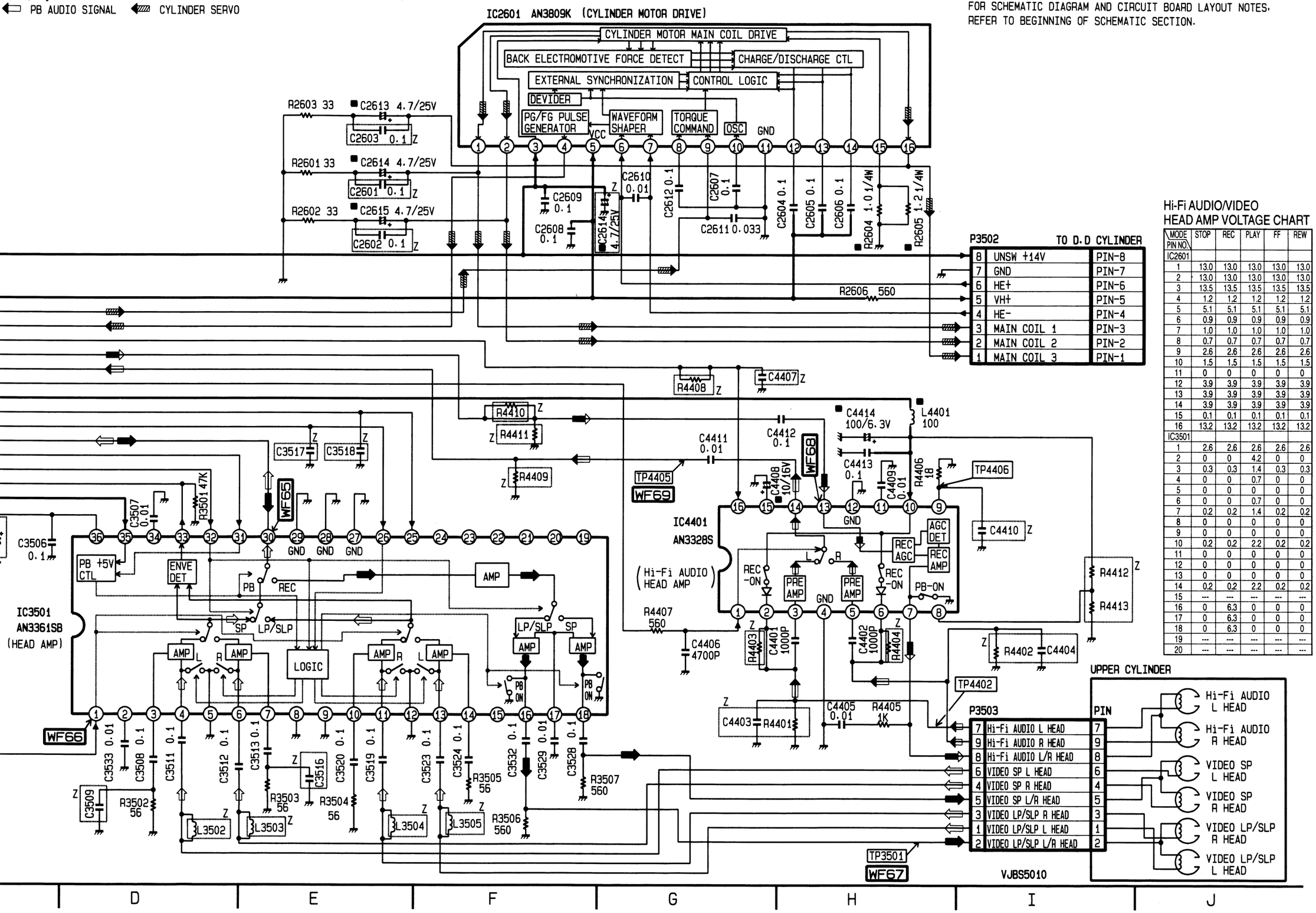

NOTE:
FOR SCHEMATIC DIAGRAM AND CIRCUIT BOARD LAYOUT NOTES, REFER TO BEGINNING OF SCHEMATIC SECTION.

COMPARISON CHART OF MODELS & MARKS

MODEL	MARK
VHQ720	A
PV-7400	B
PV-7401	C
PV-7401-K	D
VHQ740	E
PV-7450	F
PV-7451	G
VHQ760	H
Not Used	Z

Hi-Fi AUDIO/VIDEO HEAD AMP VOLTAGE CHART

MODE / PIN NO.	STOP	REC	PLAY	FF	REW
IC2601					
1	13.0	13.0	13.0	13.0	13.0
2	13.0	13.0	13.0	13.0	13.0
3	13.5	13.5	13.5	13.5	13.5
4	1.2	1.2	1.2	1.2	1.2
5	5.1	5.1	5.1	5.1	5.1
6	0.9	0.9	0.9	0.9	0.9
7	1.0	1.0	1.0	1.0	1.0
8	0.7	0.7	0.7	0.7	0.7
9	2.6	2.6	2.6	2.6	2.6
10	1.5	1.5	1.5	1.5	1.5
11	0	0	0	0	0
12	3.9	3.9	3.9	3.9	3.9
13	3.9	3.9	3.9	3.9	3.9
14	3.9	3.9	3.9	3.9	3.9
15	0.1	0.1	0.1	0.1	0.1
16	13.2	13.2	13.2	13.2	13.2
IC3501					
1	2.6	2.6	2.6	2.6	2.6
2	0	0	4.2	0	0
3	0.3	0.3	1.4	0.3	0.3
4	0	0	0.7	0	0
5	0	0	0	0	0
6	0	0	0.7	0	0
7	0.2	0.2	1.4	0.2	0.2
8	0	0	0	0	0
9	0	0	0	0	0
10	0.2	0.2	2.2	0.2	0.2
11	0	0	0	0	0
12	0	0	0	0	0
13	0	0	0	0	0
14	0.2	0.2	2.2	0.2	0.2
15	---	---	---	---	---
16	0	6.3	0	0	0
17	0	6.3	0	0	0
18	0	6.3	0	0	0
19	---	---	---	---	---
20	---	---	---	---	---

MODE / PIN NO.	STOP	REC	PLAY	FF	REW
21	---	---	---	---	---
22	---	---	---	---	---
23	---	---	---	---	---
24	---	---	---	---	---
25	0.5	11.9	0.5	0.5	0.5
26	5.0	5.0	5.0	5.0	5.0
27	0	0	0	0	0
28	0	0	0	0	0
29	0	0	0	0	0
30	2.7	2.7	2.3	2.7	2.7
31	5.1	5.1	0.1	5.1	5.1
32	0.1	0.1	0.1	0.1	0.1
33	0	0	0	0.2	0.2
34	0.1	0.1	0.7	0.1	0.1
35	12.0	12.0	12.0	12.0	12.0
36	0.1	0.1	5.0	0.1	0.1
IC4401					
1	2.6	0	2.6	2.6	2.6
2	0	4.0	0	0	0
3	0	0.6	0	0	0
4	0	0	0	0	0
5	0.7	0.6	0	0	0
6	0	4.0	0	0	0
7	1.0	1.0	1.0	1.0	1.0
8	0.7	0.7	0.7	0.7	0.7
9	2.6	2.6	2.6	2.6	2.6
10	1.5	1.5	1.5	1.5	1.5
11	0	0	0	0	0
12	3.9	3.9	3.9	3.9	3.9
13	3.9	3.9	3.9	3.9	3.9
14	3.9	3.9	3.9	3.9	3.9
15	0.1	0.1	0.1	0.1	0.1
16	13.0	13.0	13.0	13.0	13.0
TP3501	0	0	0	0	0
TP4402	0	4.0	4.0	0	0
TP4405	0	0	0	0	0
TP4406	2.6	2.6	2.6	2.6	2.6

INTERCONNECTION SCHEMATIC DIAGRAM

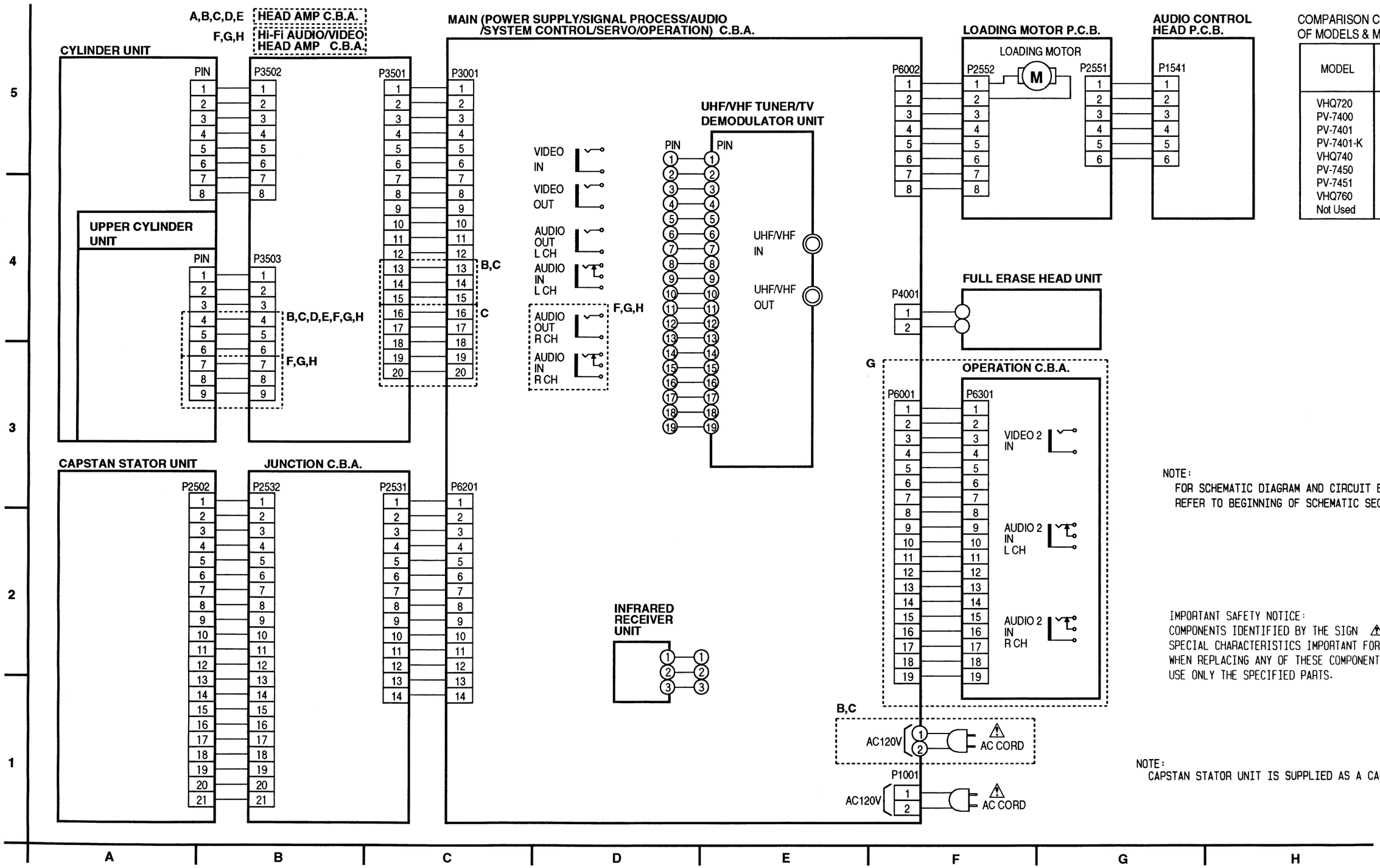

COMPARISON CHART OF MODELS & MARKS

MODEL	MARK
VHQ720	A
PV-7400	B
PV-7401	C
PV-7401-K	D
VHQ740	E
PV-7450	F
PV-7451	G
VHQ760	H
Not Used	Z

NOTE:
FOR SCHEMATIC DIAGRAM AND CIRCUIT BOARD LAYOUT NOTES, REFER TO BEGINNING OF SCHEMATIC SECTION.

IMPORTANT SAFETY NOTICE:
COMPONENTS IDENTIFIED BY THE SIGN ⚠ HAVE SPECIAL CHARACTERISTICS IMPORTANT FOR SAFETY. WHEN REPLACING ANY OF THESE COMPONENTS, USE ONLY THE SPECIFIED PARTS.

NOTE:
CAPSTAN STATOR UNIT IS SUPPLIED AS A CAPSTAN STATOR KIT ONLY.

CIRCUIT BOARD LAYOUT

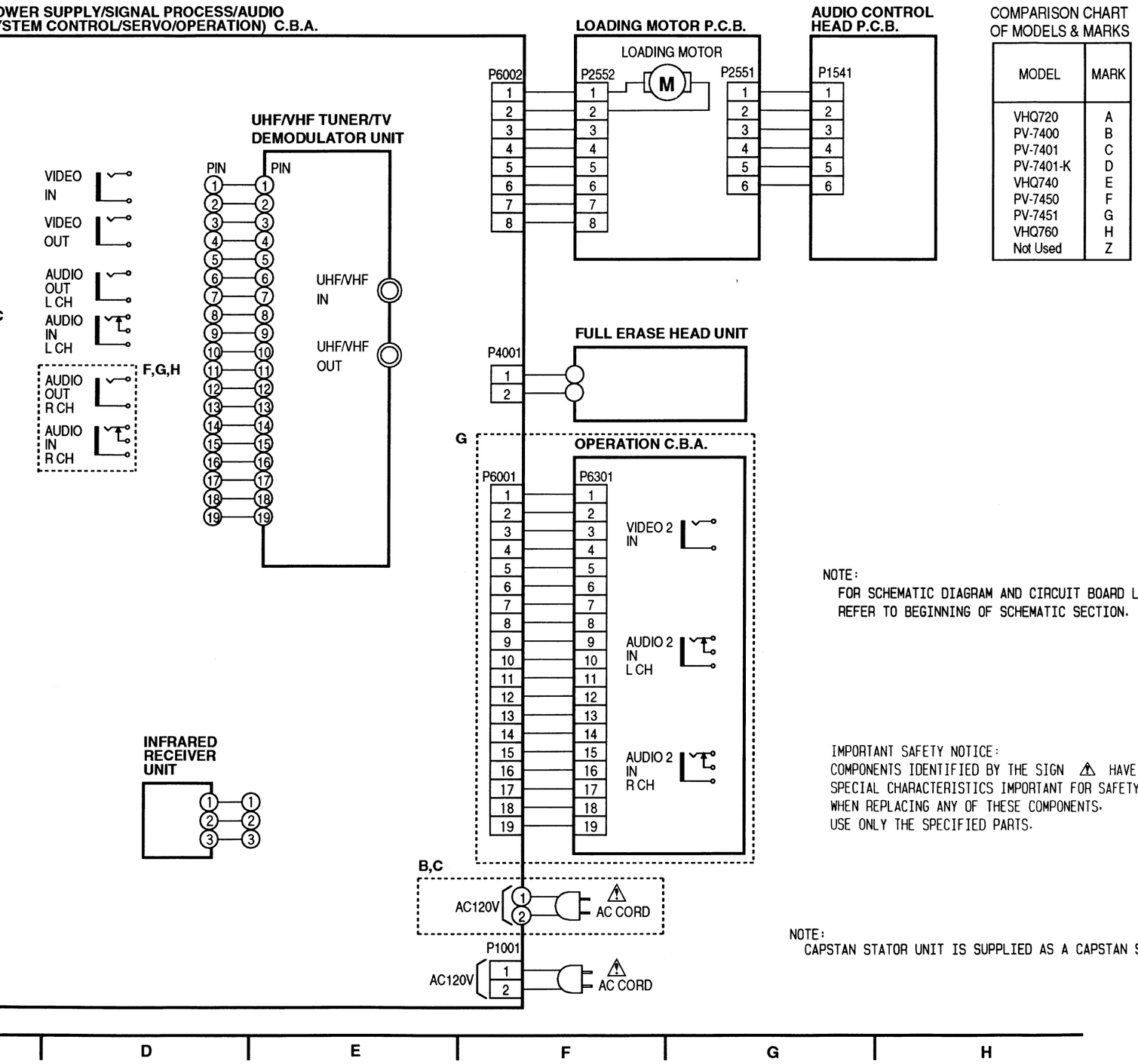

COMPARISON CHART OF MODELS & MARKS

MODEL	MARK
VHQ720	A
PV-7400	B
PV-7401	C
PV-7401-K	D
VHQ740	E
PV-7450	F
PV-7451	G
VHQ760	H
Not Used	Z

NOTE:
FOR SCHEMATIC DIAGRAM AND CIRCUIT BOARD LAYOUT NOTES, REFER TO BEGINNING OF SCHEMATIC SECTION.

IMPORTANT SAFETY NOTICE:
COMPONENTS IDENTIFIED BY THE SIGN ⚠ HAVE SPECIAL CHARACTERISTICS IMPORTANT FOR SAFETY. WHEN REPLACING ANY OF THESE COMPONENTS, USE ONLY THE SPECIFIED PARTS.

NOTE:
CAPSTAN STATOR UNIT IS SUPPLIED AS A CAPSTAN STATOR KIT ONLY.

JUNCTION C.B.A. VEPS0A25A

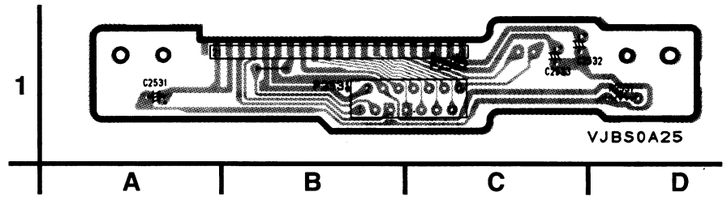

MAIN (POWER SUPPLY/SIGNAL PROCESS/AUDIO/SYSTEM CONTROL/SERVO/OPERATION) C.B.A. VEPS6026AC (A) /VEPS6026GB (E) /VEPS6026HB (H)

HOT CIRCUIT. BE CAREFUL AND USE AN ISOLATION TRANSFORMER WHEN SERVICING.

※1

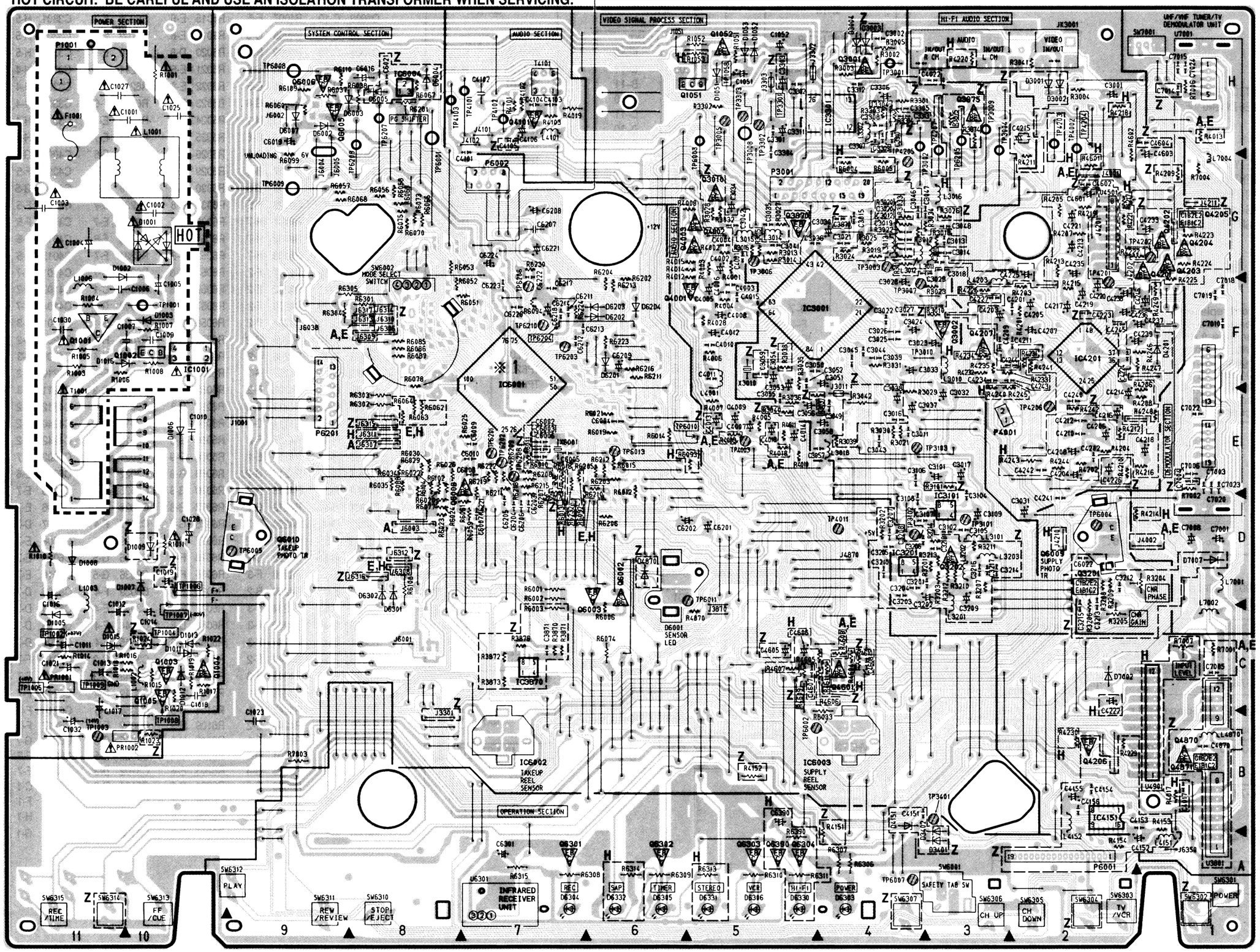

LOADING MOTOR P.C.B.

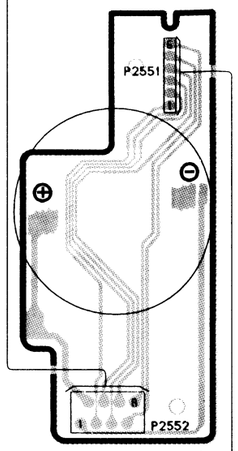

AUDIO CONTROL HEAD P.C.B.

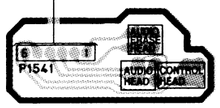

/VEPS6026HB (H)

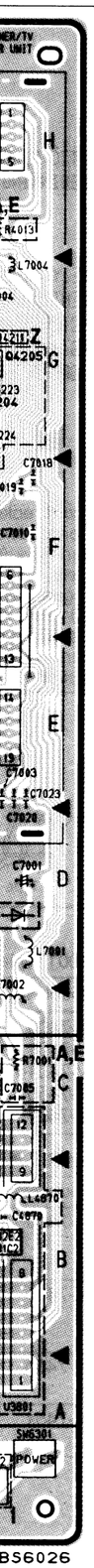

LOADING MOTOR P.C.B.

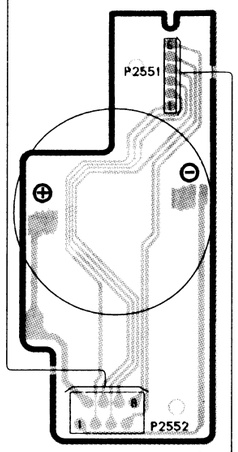

VJBS0A23

AUDIO CONTROL HEAD P.C.B.

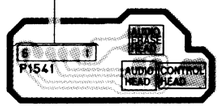

VJBS0A24

※ 1 IC6001 replacement note:

Model No.	products	replacement parts
VHQ720 VHQ740 VHQ760	MN675048A5B2 MN675048A5B1 MN675048A5B	MN675048A5B2

IMPORTANT SAFETY NOTICE:
COMPONENTS IDENTIFIED BY THE SIGN ⚠ HAVE SPECIAL CHARACTERISTICS IMPORTANT FOR SAFETY. WHEN REPLACING ANY OF THESE COMPONENTS, USE ONLY THE SPECIFIED PARTS.

NOTE:
FOR SCHEMATIC DIAGRAM AND CIRCUIT BOARD LAYOUT NOTES, REFER TO BEGINNING OF SCHEMATIC SECTION.

MAIN	
TRANSISTOR	
Q1001	F-11
Q1002	F-10
Q1051	H-5
Q3002	F-3
Q3010	G-5
Q3201	D-2
Q3202	D-3
Q3870	G-5
Q3875	H-3
Q4201	G-1
Q4202	G-1
Q4203	G-1
Q4204	G-1
Q4205	G-1
Q4206	B-2
Q4207	F-3
Q4870	B-1
Q4871	B-1
Q6001	C-8
Q6007	H-9
Q6009	D-2
Q6010	D-9

MAIN	
IC	
IC1001	F-10
IC3001	F-5
IC3101	D-4
IC3201	D-4
IC3301	H-4
IC3870	C-7
IC4151	B-2
IC4201	F-2
IC6001	F-7
IC6002	B-7
IC6003	B-5
IC6004	H-8

MAIN	
TEST POINT	
TP1001	F-10
TP1002	C-11
TP1003	B-11
TP1004	C-10
TP1005	C-11
TP1006	D-10
TP1007	C-10
TP1008	B-10
TP1009	C-11
TP1058	H-5
TP3001	H-4
TP3002	G-4
TP3003	G-4
TP3004	H-3
TP3005	H-5
TP3006	G-5
TP3007	F-4
TP3008	H-5
TP3009	H-3
TP3101	D-3
TP3102	D-4
TP3103	E-3
TP3301	H-5
TP3302	H-5
TP3303	H-5
TP3401	B-3
TP4002	H-2
TP4003	E-5
TP4011	D-4

MAIN	
ADJUSTMENT	
R3204	D-1
R3205	C-2
R6201	H-8
R7007	C-1

MAIN	
TEST POINT	
TP4101	H-7
TP4102	H-7
TP4103	H-8
TP4201	G-2
TP4202	G-1
TP4203	H-2
TP4204	H-2
TP4205	H-4
TP4206	E-2
TP4207	H-3
TP6001	G-8
TP6002	B-5
TP6003	H-5
TP6004	D-2
TP6005	D-9
TP6007	A-1
TP6008	H-9
TP6009	G-9
TP6010	E-5
TP6013	E-6
TP6201	E-7
TP6202	E-7
TP6203	F-7
TP6204	F-7
TP6206	F-7
TP6207	H-8
TP6208	E-7
TP6209	G-8
TP6210	F-7

MAIN	
CONNECTOR	
P1001	H-11
P3001	G-5
P4001	E-3
P6001	A-1
P6002	G-7
P6201	E-9

COMPARISON CHART OF MODELS & MARKS

MODEL	MARK
VHQ720	A
PV-7400	B
PV-7401	C
PV-7401-K	D
VHQ740	E
PV-7450	F
PV-7451	G
VHQ760	H
Not Used	Z

LEADLESS COMPONENT PARTS LOCATION GUIDE

MAIN C.B.A.

Q1003	C-10	R3035	F-5	R4221	G-2	R6064	E-8	R7002	D-1	C4004	G-5
Q1004	C-10	R3036	E-5	R4222	G-2	R6066	G-8	R7004	G-1	C4006	F-5
Q1005	C-10	R3041	H-2	R4226	F-3	R6068	G-9	R7006	H-1	C4010	F-5
Q1052	H-5	R3301	H-4	R4230	B-2	R6069	G-8	C3002	H-4	C4011	F-5
Q3001	H-4	R3302	H-5	R4234	F-3	R6070	G-8	C3011	E-4	C4015	F-5
Q3002	F-3	R3303	H-4	R4240	F-3	R6073	G-8	C3014	G-3	C4101	H-7
Q4001	F-6	R4001	G-5	R4241	F-3	R6075	G-8	C3015	G-4	C4103	H-7
Q4002	G-5	R4002	G-5	R4244	E-2	R6077	D-8	C3018	G-3	C4104	H-7
Q4003	G-6	R4003	G-5	R4245	E-3	R6078	F-8	C3019	G-4	C4201	F-3
Q4101	H-7	R4004	F-5	R4246	F-1	R6085	F-8	C3021	G-4	C4202	E-2
Q6002	D-6	R4005	E-5	R4247	F-1	R6086	F-8	C3022	F-4	C4209	F-3
Q6003	D-7	R4006	F-5	R4248	E-2	R6087	F-8	C3025	F-4	C4210	E-2
Q6005	H-9	R4007	E-5	R4249	F-1	R6088	D-8	C3026	F-4	C4211	F-3
Q6006	H-9	R4008	G-6	R6004	G-4	R6093	E-6	C3027	F-4	C4212	E-2
Q6008	D-8	R4009	E-5	R6005	G-4	R6094	F-7	C3029	F-3	C4240	E-2
Q6301	A-7	R4010	E-5	R6006	C-6	R6099	G-9	C3035	G-5	C4242	E-2
Q6302	A-6	R4011	E-5	R6012	E-6	R6102	E-8	C3036	G-5	C4244	F-3
Q6303	A-5	R4012	G-6	R6013	E-7	R6104	D-8	C3039	F-4	C6002	E-7
Q6304	A-5	R4013	H-1	R6014	E-6	R6109	H-9	C3043	E-4	C6004	E-6
Q6390	A-5	R4014	G-6	R6015	E-6	R6110	H-9	C3044	F-4	C6005	E-7
R1006	F-11	R4015	G-6	R6019	E-6	R6202	G-6	C3045	F-4	C6006	E-7
R1014	C-11	R4017	B-1	R6020	D-8	R6203	E-6	C3047	G-3	C6007	D-7
R1015	C-10	R4018	E-5	R6021	E-6	R6204	G-6	C3048	G-3	C6008	E-7
R1016	C-11	R4028	F-5	R6022	E-8	R6205	E-7	C3049	E-4	C6009	E-7
R1017	C-10	R4101	H-7	R6023	D-8	R6206	D-6	C3050	F-5	C6010	E-7
R1018	C-11	R4102	H-7	R6024	D-8	R6207	D-7	C3052	F-5	C6203	D-7
R1019	C-10	R4103	H-7	R6025	E-7	R6208	E-7	C3055	E-5	C6204	D-7
R1020	C-10	R4201	F-2	R6026	E-8	R6209	E-7	C3057	E-5	C6205	D-7
R1022	C-10	R4202	E-2	R6029	E-8	R6210	E-7	C3102	D-3	C6206	D-7
R1051	H-5	R4203	F-2	R6030	E-8	R6211	F-6	C3104	D-3	C6211	F-7
R3002	H-4	R4204	E-2	R6034	E-8	R6212	E-6	C3105	D-3	C6212	F-7
R3003	H-4	R4205	G-2	R6035	E-8	R6213	F-6	C3106	E-4	C6213	F-7
R3004	H-2	R4206	F-2	R6051	F-8	R6214	E-7	C3108	D-4	C6214	F-7
R3010	F-3	R4207	G-2	R6052	F-8	R6215	E-7	C3301	H-5	C6217	F-7
R3021	E-4	R4208	E-2	R6053	G-8	R6216	F-6	C3302	H-5	C6222	G-7
R3022	G-4	R4213	G-2	R6056	G-8	R6218	E-7	C3304	H-5	C6223	F-7
R3023	F-3	R4214	D-1	R6057	G-9	R6219	E-7	C3305	H-4	C6228	F-7
R3027	G-5	R4215	F-2	R6058	G-8	R6221	D-7	C3307	H-4	C7005	C-1
R3029	E-4	R4216	E-1	R6059	D-7	R6222	E-7	C3308	H-4	C7010	F-1
R3030	E-4	R4217	G-2	R6060	H-9	R6223	F-6	C3310	H-4	C7024	H-1
R3031	F-4	R4218	H-2	R6061	D-8	R6224	F-7	C3312	H-4	L7004	G-1
R3033	G-4	R4219	G-2	R6062	E-8	R6230	G-7	C4001	G-5		
R3034	G-4	R4220	H-3	R6063	E-8	R7001	C-1	C4003	F-5		

MAIN (POWER SUPPLY/SIGNAL PROCESS/AUDIO/SYSTEM CONTROL/SERVO/OPERATION) C.B.A. VEPS6023GH (B) /VEPS6023GJ (C,D) /VEPS6023HH (F) /VEPS6023HJ (G)

HOT CIRCUIT. BE CAREFUL AND USE AN ISOLATION TRANSFORMER WHEN SERVICING.

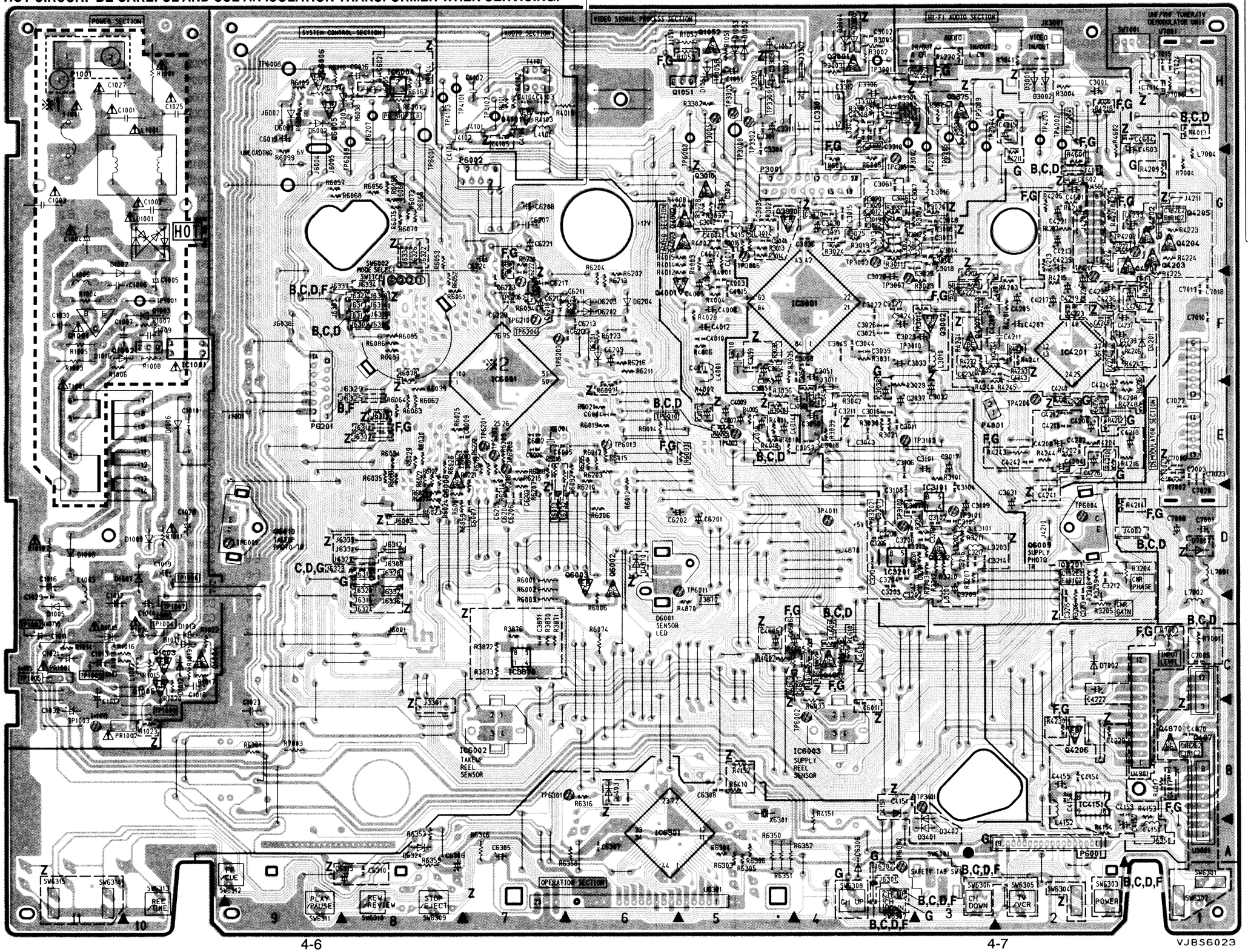

4-6 4-7

LOADING MOTOR P.C.B.

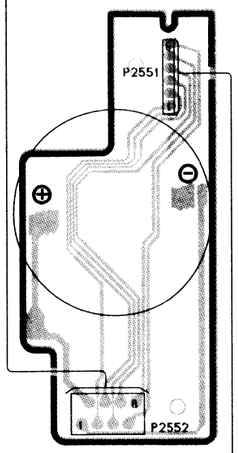

VJBS0A23

AUDIO CONTROL HEAD P.C.B.

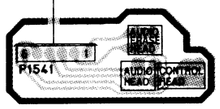

VJBS0A24

NOTE:
FOR SCHEMATIC DIAG
REFER TO BEGINNING

IMPORTANT SAFETY NOTI
COMPONENTS IDENTIFIED
SPECIAL CHARACTERISTI
WHEN REPLACING ANY OF
USE ONLY THE SPECIFIE

※1 AC cord repl
for mode
Either Type-
models. How
changeability
P1001 as a k
ment. When
A, connect C
and connect

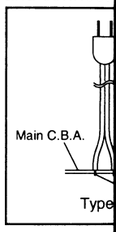

※2 IC6001 repla

Model No.
PV-7400
PV-7401
PV-7401-K
PV-7450
PV-7451

Main C.B.A.

Model No.
PV-7400
PV-7401
PV-7450
PV-7451

LOADING MOTOR P.C.B.

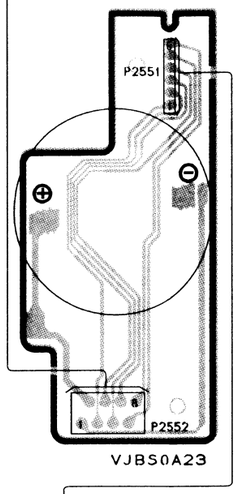

NOTE:
FOR SCHEMATIC DIAGRAM AND CIRCUIT BOARD LAYOUT NOTES, REFER TO BEGINNING OF SCHEMATIC SECTION.

IMPORTANT SAFETY NOTICE:
COMPONENTS IDENTIFIED BY THE SIGN ⚠ HAVE SPECIAL CHARACTERISTICS IMPORTANT FOR SAFETY. WHEN REPLACING ANY OF THESE COMPONENTS, USE ONLY THE SPECIFIED PARTS.

AUDIO CONTROL HEAD P.C.B.

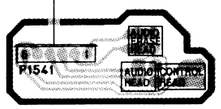

※1 AC cord replacement note
for models PV-7400 and PV-7401:
Either Type-A or B is used as a AC cord for these models. However, for parts standardization and interchangeability, Type-B will be supplied with Connector P1001 as a kit (Part No.: VJAS0195-FS) for replacement. When replacing AC cord on products using Type-A, connect Connector P1001 to Main C.B.A. with solder and connect AC cord to Connector P1001.

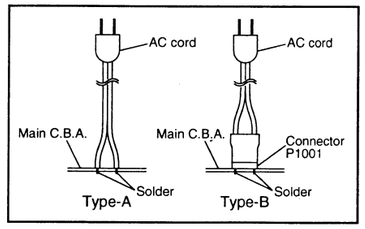

※2 IC6001 replacement note:

Model No.	products	replacement parts
PV-7400 PV-7401 PV-7401-K PV-7450 PV-7451	MN675048A5A3 MN675048A5A2 MN675048A5A1 MN675048A5A	MN675048A5A3

Main C.B.A. replacement note:

Model No.	products	replacement parts
PV-7400	VEPS6023GH VEPS6023GF VEPS6023GK	VEPS6023GH
PV-7401	VEPS6023GJ VEPS6023GA VEPS6023GL	VEPS6023GJ
PV-7450	VEPS6023HH VEPS6023HF	VEPS6023HH
PV-7451	VEPS6023HJ VEPS6023HA	VEPS6023HJ

MAIN	
TRANSISTOR	
Q1001	F-11
Q1002	F-10
Q1003	C-10
Q1004	C-10
Q1005	C-10
Q1051	H-6
Q1052	H-5
Q3001	H-4
Q3002	F-3
Q3010	G-5
Q3201	D-2
Q3202	D-3
Q3870	G-5
Q3875	H-3
Q4001	F-6
Q4002	G-5
Q4003	G-6
Q4101	H-7
Q4201	F-2
Q4202	G-1
Q4203	G-1
Q4204	G-1
Q4205	G-1
Q4206	B-2
Q4207	F-3
Q4601	C-4
Q4870	B-1
Q4871	B-1
Q6001	C-8
Q6002	D-6
Q6003	D-6
Q6005	H-9
Q6006	H-9
Q6007	H-9
Q6008	D-8
Q6009	D-2
Q6010	D-9

COMPARISON CHART OF MODELS & MARKS

MODEL	MARK
VHQ720	A
PV-7400	B
PV-7401	C
PV-7401-K	D
VHQ740	E
PV-7450	F
PV-7451	G
VHQ760	H
Not Used	Z

MAIN	
TEST POINT	
TP1001	F-10
TP1002	C-11
TP1003	B-11
TP1004	C-10
TP1005	C-11
TP1006	D-10
TP1007	C-10
TP1008	B-10
TP1009	C-11
TP1058	H-5
TP3001	H-4
TP3002	G-3
TP3003	G-4
TP3004	H-2
TP3005	H-5
TP3006	G-5
TP3007	F-4
TP3008	G-5
TP3009	H-3
TP3010	F-4
TP3101	D-3
TP3102	D-4
TP3103	E-3
TP3301	H-5
TP3302	H-5
TP3303	H-5
TP3401	B-3
TP4002	H-2
TP4003	E-5
TP4011	D-4
TP4101	H-7

MAIN	
IC	
IC1001	F-10
IC3001	F-4
IC3101	D-3
IC3201	D-4
IC3301	H-4
IC3870	C-7
IC4151	B-2
IC4201	F-2
IC6001	F-7
IC6002	B-7
IC6003	B-4
IC6004	H-8

MAIN	
TEST POINT	
TP4102	H-7
TP4103	H-8
TP4201	G-2
TP4202	G-1
TP4203	H-2
TP4204	H-2
TP4205	H-4
TP4206	E-2
TP4207	H-3
TP6001	G-8
TP6002	B-4
TP6003	G-5
TP6004	D-2
TP6005	D-9
TP6007	A-4
TP6008	H-9
TP6010	E-6
TP6011	D-5
TP6013	E-6
TP6201	E-7
TP6202	E-7
TP6203	F-7
TP6204	F-7
TP6205	G-3
TP6206	F-7
TP6207	H-8
TP6208	E-7
TP6209	G-8
TP6210	F-7
TP6301	B-7

MAIN	
CONNECTOR	
P1001	H-11
P3001	G-5
P4001	E-3
P6001	A-2
P6002	G-7
P6201	E-9

MAIN	
ADJUSTMENT	
R3204	D-1
R3205	C-2
R6201	H-8
R7007	C-1

LEADLESS COMPONENT PARTS LOCATION GUIDE
MAIN C.B.A.

Q1003	C-10	R4007	E-5	R6015	E-6	R6208	E-7	C3301	H-5
Q1004	C-10	R4008	G-6	R6019	E-6	R6209	E-7	C3302	H-5
Q1005	C-10	R4009	E-5	R6020	D-8	R6210	E-7	C3304	H-5
Q1052	H-5	R4010	E-5	R6021	E-6	R6211	F-6	C3305	H-4
Q3001	H-4	R4011	E-5	R6022	E-8	R6212	E-6	C3307	H-4
Q3002	F-3	R4012	G-6	R6023	D-8	R6213	F-6	C3308	H-4
Q4001	F-6	R4013	H-1	R6024	D-8	R6214	E-7	C3310	H-4
Q4002	G-5	R4014	G-6	R6025	E-7	R6215	E-7	C3312	H-4
Q4003	G-6	R4015	G-6	R6026	E-8	R6216	F-6	C4001	G-5
Q4101	H-7	R4017	B-1	R6029	E-8	R6218	E-7	C4003	F-5
Q6002	D-6	R4018	E-5	R6030	E-8	R6219	E-7	C4004	G-5
Q6003	D-7	R4028	F-5	R6034	E-8	R6221	D-7	C4006	F-5
Q6005	H-9	R4101	H-7	R6035	E-8	R6222	E-7	C4010	F-5
Q6006	H-9	R4102	H-7	R6051	F-8	R6223	F-6	C4011	F-5
Q6008	D-8	R4103	H-7	R6052	F-8	R6224	F-7	C4015	F-5
R1006	F-11	R4201	F-2	R6053	G-8	R6230	G-7	C4101	H-7
R1014	C-11	R4202	E-2	R6056	G-8	R7001	C-1	C4103	H-7
R1015	C-10	R4203	F-2	R6057	G-9	R7002	D-1	C4104	H-7
R1016	C-11	R4204	E-2	R6058	G-8	R7004	G-1	C4201	F-3
R1017	C-10	R4205	G-2	R6059	D-7	R7006	H-1	C4202	E-2
R1018	C-11	R4206	F-2	R6060	H-9	C3002	H-4	C4209	F-3
R1019	C-10	R4207	G-2	R6061	D-8	C3011	E-4	C4210	E-2
R1020	C-10	R4208	E-2	R6062	E-8	C3014	G-3	C4211	F-3
R1022	C-10	R4213	G-2	R6063	E-8	C3015	G-4	C4212	E-2
R1051	H-5	R4214	D-1	R6064	E-8	C3018	G-3	C4240	E-2
R3002	H-4	R4215	F-2	R6066	G-8	C3019	G-4	C4242	E-2
R3003	H-4	R4216	E-1	R6068	G-9	C3021	G-4	C6002	E-7
R3004	H-2	R4217	G-2	R6069	G-8	C3022	F-4	C6004	E-6
R3010	F-3	R4218	H-2	R6070	G-8	C3025	F-4	C6005	E-7
R3021	E-4	R4219	G-2	R6073	G-8	C3026	F-4	C6006	E-7
R3022	G-4	R4220	H-3	R6075	G-8	C3027	F-4	C6007	D-7
R3023	F-3	R4221	G-2	R6077	D-8	C3029	F-3	C6008	E-7
R3027	G-5	R4222	G-2	R6078	F-8	C3035	G-5	C6009	E-7
R3029	E-4	R4226	F-3	R6085	F-8	C3036	G-5	C6010	E-7
R3030	E-4	R4230	B-2	R6086	F-8	C3039	F-4	C6203	D-7
R3031	F-4	R4234	F-3	R6087	F-8	C3043	E-4	C6204	D-7
R3033	G-4	R4240	F-3	R6088	D-8	C3044	F-4	C6205	D-7
R3034	G-4	R4241	F-3	R6093	E-6	C3045	F-4	C6206	D-7
R3035	F-5	R4244	E-2	R6094	F-7	C3047	G-3	C6211	F-7
R3036	E-5	R4245	E-3	R6099	G-9	C3048	G-3	C6212	F-7
R3041	H-2	R4246	F-1	R6102	E-8	C3049	E-4	C6213	F-7
R3301	H-4	R4247	F-1	R6104	D-8	C3050	F-5	C6214	F-7
R3302	H-5	R4248	E-2	R6109	H-9	C3052	F-5	C6217	F-7
R3303	H-4	R4249	F-1	R6110	H-9	C3055	E-5	C6222	G-7
R4001	G-5	R6004	G-4	R6202	G-6	C3057	E-5	C6223	F-7
R4002	G-5	R6005	G-4	R6203	E-6	C3102	D-3	C6228	F-7
R4003	G-5	R6006	C-6	R6204	G-6	C3104	D-3	C7005	C-1
R4004	F-5	R6012	E-6	R6205	E-7	C3105	D-3	C7010	F-1
R4005	E-5	R6013	E-7	R6206	D-6	C3106	E-4	C7024	H-1
R4006	F-5	R6014	E-6	R6207	D-7	C3108	D-4	L7004	G-1

NOTE:
FOR SCHEMATIC DIAGRAM AND CIRCUIT BOARD LAYOUT NOTES,
REFER TO BEGINNING OF SCHEMATIC SECTION.

HEAD AMP C.B.A. VEPS5012A(A)

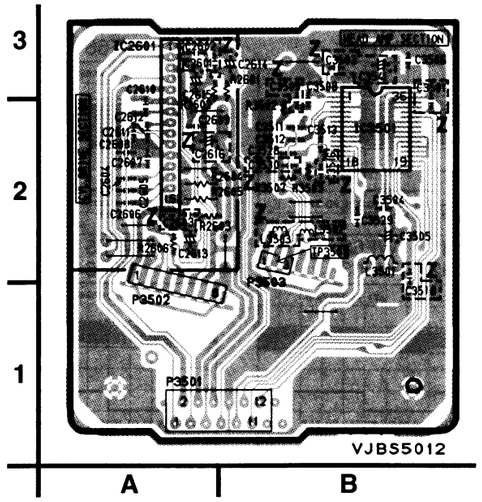

HEAD AMP	
IC	
IC2601	A–2
IC3501	B–2
CONNECTOR	
P3501	A–1
P3502	A–1
P3503	B–2
TEST POINT	
TP3501	B–2

LEADLESS COMPONENT PARTS LOCATION GUIDE
HEAD AMP C.B.A.

R2601	B-3	C2605	A-2	C3504	B-2
R2602	A-3	C2606	A-2	C3506	B-3
R2603	A-2	C2607	A-2	C3508	B-3
R2606	A-2	C2608	A-2	C3511	B-2
R3502	B-2	C2609	A-2	C3512	B-2
R3503	B-2	C2610	A-3	C3513	B-2
R3507	B-2	C2611	A-2	C3528	B-2
C2604	A-2	C2612	A-2	C3529	B-2

Hi-Fi AUDIO/VIDEO HEAD AMP C.B.A. VEPS5010A(F,C

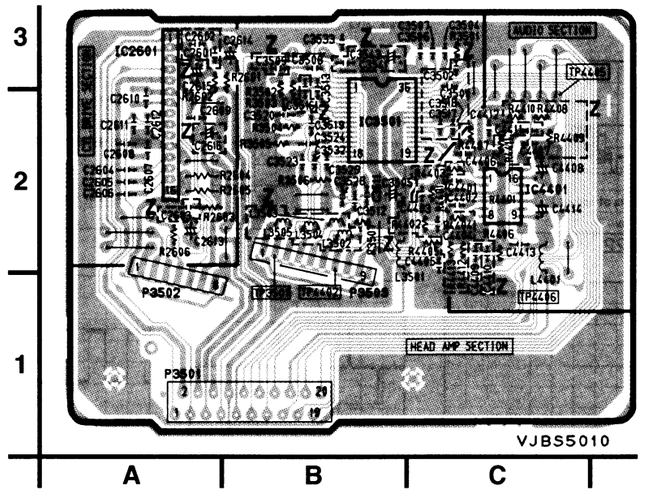

HEAD AMP C.B.A. VEPS5011A(B,C,D,E)

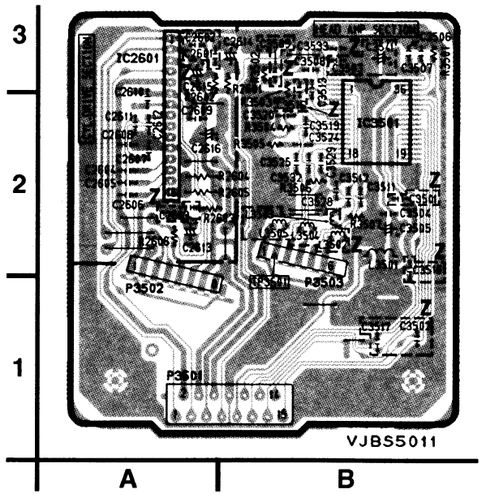

HEAD AMP	
IC	
IC2601	A–3
IC3501	B–2
CONNECTOR	
P3501	A–1
P3502	A–1
P3503	B–2
TEST POINT	
TP3501	B–2

LEADLESS COMPONENT PARTS LOCATION GUIDE
HEAD AMP C.B.A.

R2601	B-3	C2605	A-2	C3511	B-2
R2602	A-3	C2606	A-2	C3512	B-2
R2603	A-2	C2607	A-2	C3513	B-2
R2606	A-2	C2608	A-2	C3519	B-2
R3501	B-3	C2609	A-2	C3520	B-2
R3502	B-3	C2610	A-3	C3524	B-2
R3503	B-2	C2611	A-2	C3525	B-2
R3504	B-2	C2612	A-2	C3528	B-2
R3505	B-2	C3504	B-2	C3529	B-2
R3506	B-2	C3506	B-3	C3532	B-2
R3507	B-2	C3507	B-3	C3533	B-3
C2604	A-2	C3508	B-3		

OPERATOIN C.B.A. VEPS8022A(G)

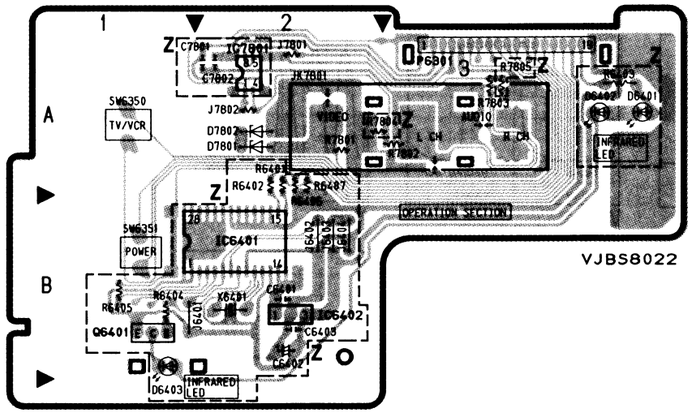

NOTE:
FOR SCHEMATIC DIAGRAM AND CIRCUIT BOARD LAYOUT NOTES,
REFER TO BEGINNING OF SCHEMATIC SECTION.

Hi-Fi AUDIO/VIDEO HEAD AMP C.B.A. VEPS5010A(F,G,H)

EAD AMP	
IC	
	A–2
	B–2
NNECTOR	
	A–1
	A–1
	B–2
POINT	
	B–2

LEADLESS COMPONENT PARTS LOCATION GUIDE
HEAD AMP C.B.A.

R2601	B-3	C2605	A-2	C3504	B-2
R2602	A-3	C2606	A-2	C3506	B-3
R2603	A-2	C2607	A-2	C3508	B-3
R2606	A-2	C2608	A-2	C3511	B-2
R3502	B-2	C2609	A-2	C3512	B-2
R3503	B-2	C2610	A-3	C3513	B-2
R3507	B-2	C2611	A-2	C3528	B-2
C2604	A-2	C2612	A-2	C3529	B-2

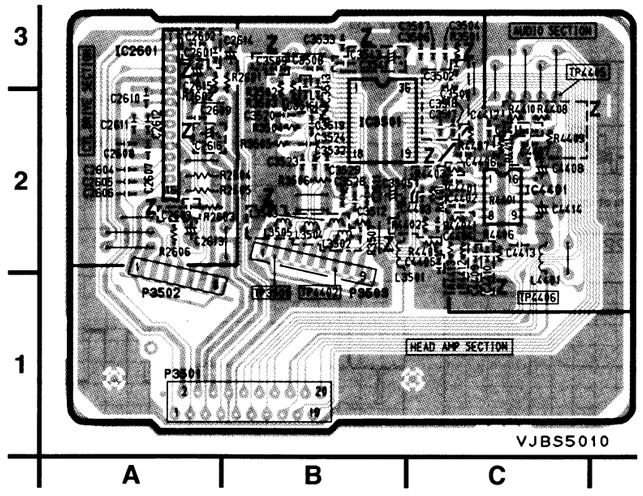

Hi-Fi AUDIO/VIDEO HEAD AMP	
IC	
IC2601	A–3
IC3501	B–2
IC4401	C–2
CONNECTOR	
P3501	A–1
P3502	A–1
P3503	B–2
TEST POINT	
TP3501	B–2
TP4402	B–2
TP4405	C–2
TP4406	C–1

LEADLESS COMPONENT PARTS LOCATION GUIDE
Hi-Fi AUDIO/VIDEO HEAD AMP C.B.A.

R2601	B-3	C2606	A-2	C3523	B-2
R2602	A-2	C2607	A-2	C3524	B-2
R2603	A-2	C2608	A-2	C3528	B-2
R2606	A-2	C2609	A-2	C3529	B-2
R3501	C-3	C2610	A-2	C3532	B-2
R3502	B-2	C2611	A-2	C3533	B-3
R3503	B-3	C2612	A-2	C4401	C-2
R3504	B-2	C3504	C-3	C4402	C-2
R3505	B-2	C3506	B-3	C4405	C-2
R3506	B-2	C3507	C-3	C4406	C-2
R3507	B-2	C3508	B-3	C4409	C-2
R4405	C-2	C3511	B-2	C4411	C-2
R4406	C-2	C3512	B-2	C4412	C-2
R4407	C-2	C3513	B-2	C4413	C-2
C2604	A-2	C3519	B-2		
C2605	A-2	C3520	B-2		

OPERATOIN C.B.A. VEPS8022A(G)

AD AMP	
IC	
	A–3
	B–2
NNECTOR	
	A–1
	A–1
	B–2
POINT	
	B–2

LEADLESS COMPONENT PARTS LOCATION GUIDE
HEAD AMP C.B.A.

R2601	B-3	C2605	A-2	C3511	B-2
R2602	A-3	C2606	A-2	C3512	B-2
R2603	A-2	C2607	A-2	C3513	B-2
R2606	A-2	C2608	A-2	C3519	B-2
R3501	B-3	C2609	A-2	C3520	B-2
R3502	B-3	C2610	A-3	C3524	B-2
R3503	B-2	C2611	A-2	C3525	B-2
R3504	B-2	C2612	A-2	C3528	B-2
R3505	B-2	C3504	B-2	C3529	B-2
R3506	B-2	C3506	B-3	C3532	B-2
R3507	B-2	C3507	B-3	C3533	B-3
C2604	A-2	C3508	B-3		

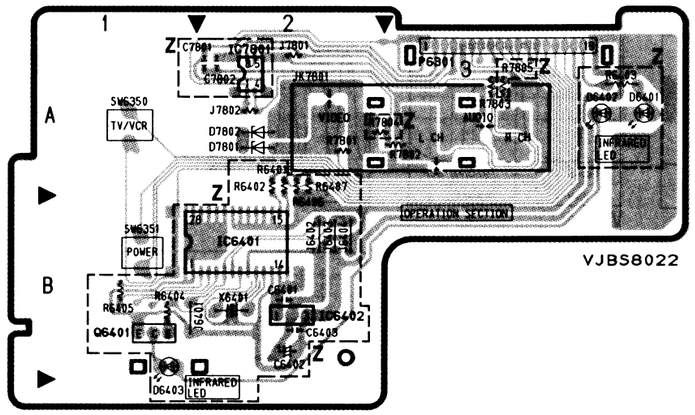

OPERATION	
IC	
IC6401	B–2
IC6402	B–2
IC7801	A–2
TRANSISTOR	
Q6401	B–1
CONNECTOR	
P6301	A–3

COMPARISON CHART
OF MODELS & MARKS

MODEL	MARK
VHQ720	A
PV-7400	B
PV-7401	C
PV-7401-K	D
VHQ740	E
PV-7450	F
PV-7451	G
VHQ760	H
Not Used	Z

NOTE:
FOR SCHEMATIC DIAGRAM AND CIRCUIT BOARD LAYOUT NOTES,
REFER TO BEGINNING OF SCHEMATIC SECTION.

SIGNAL WAVEFORM

How to Read Waveforms

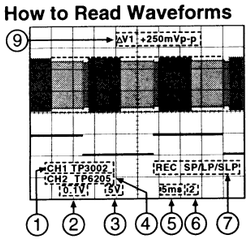

WF1 ←⑧

① Connecting Point
② Volts/Div
③ Volts/Div
④ Connecting Point
⑤ Time/Div
⑥ Trigger Channel of the scope (1:CH1,2:CH2)
⑦ Operation Mode of VCR
⑧ Waveform Point on Schematic
⑨ ΔV1:Peak to Peak

MAIN C.B.A.

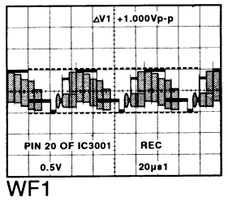

WF1

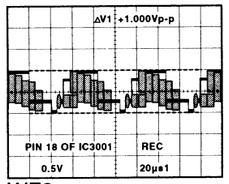

WF2

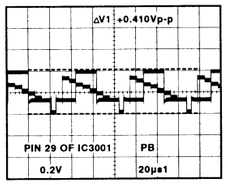

WF3

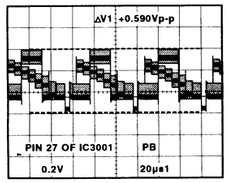

WF4

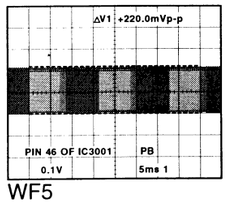

WF5

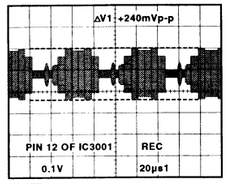

WF6

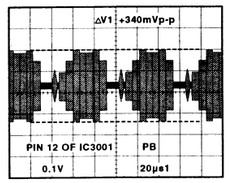

WF6

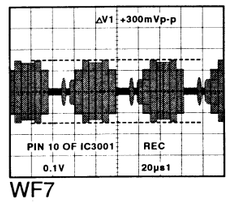

WF7

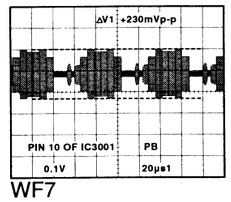

WF7

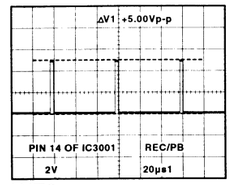

WF8

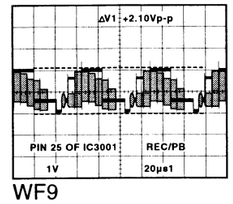

WF9

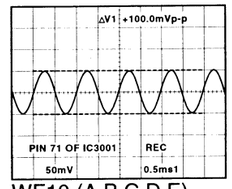

WF10 (A,B,C,D,E)

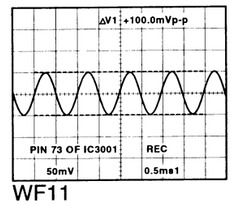

WF11

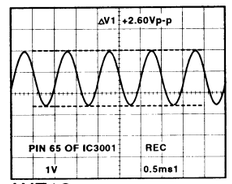

WF12

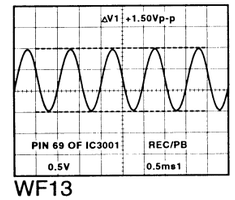

WF13

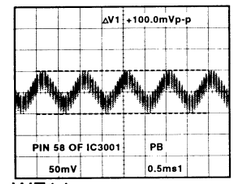

WF14

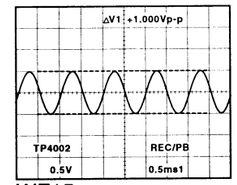

WF15

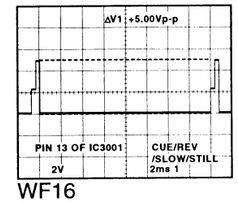

WF16

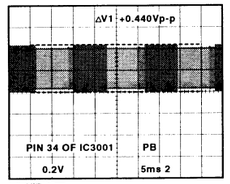

WF17

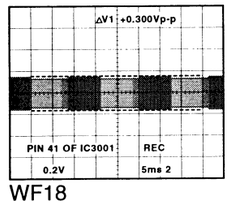

WF18

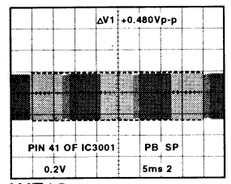

WF18

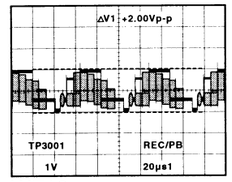

WF19

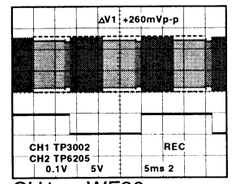

CH1 WF20
CH2 WF26

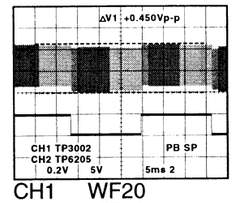

CH1 WF20
CH2 WF26

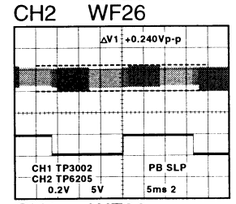

CH1 WF20
CH2 WF26

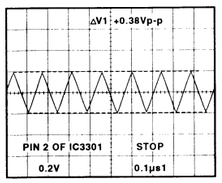

WF21

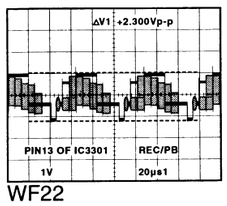

WF22

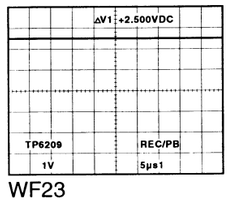

WF23

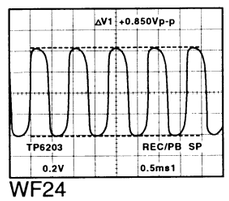

WF24

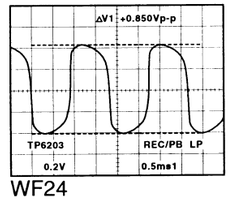

WF24

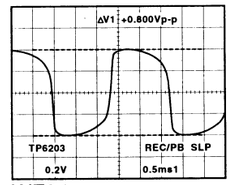

WF24

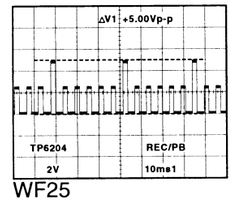

WF25

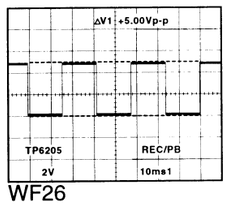

WF26

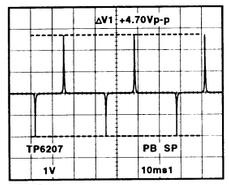

WF27

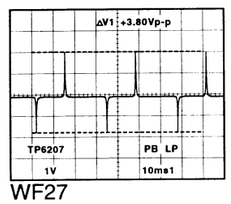

WF27

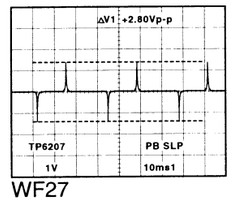

WF27

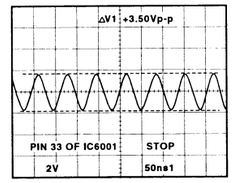

WF28

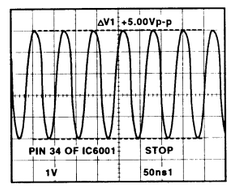

WF29

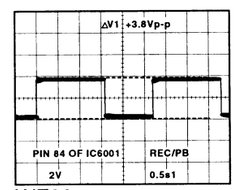

WF30

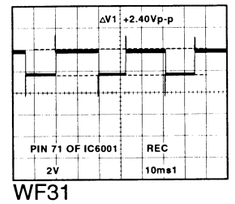

WF31

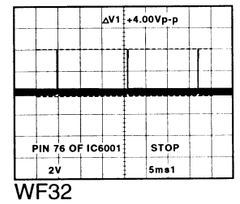

WF32

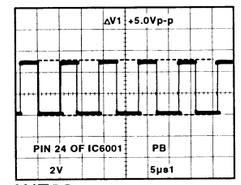

WF33

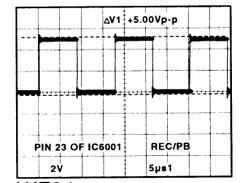

WF34

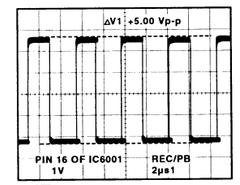

WF35

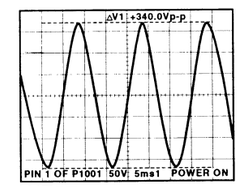

WF37

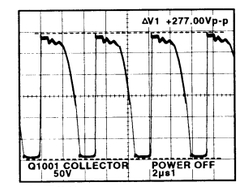

WF38

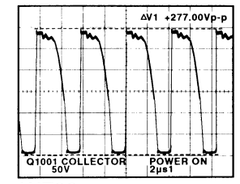

WF38

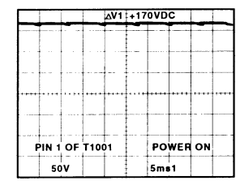

WF39

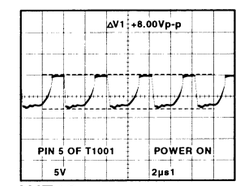

WF40

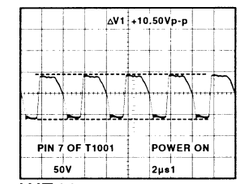

WF41

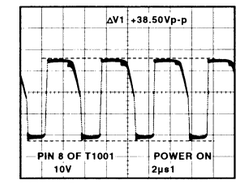

WF42

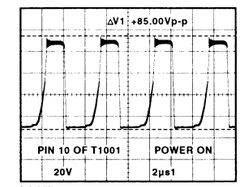

WF43

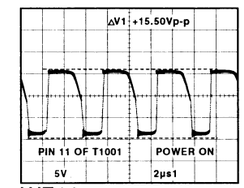

WF44

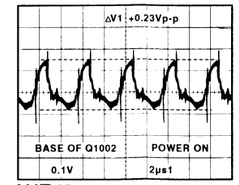

WF45

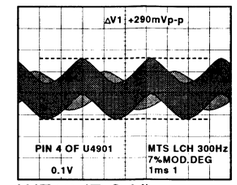

WF46 (F,G,H)

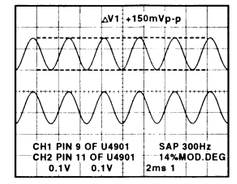

CH1 WF47 (F,G,H)
CH2 WF48 (F,G,H)

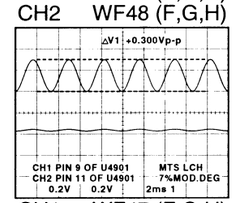

CH1 WF47 (F,G,H)
CH2 WF48 (F,G,H)

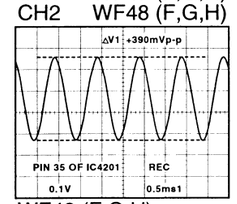

WF49 (F,G,H)

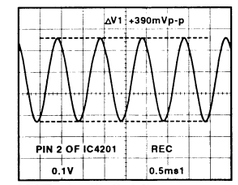

WF50 (F,G,H)

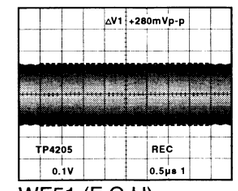

WF51 (F,G,H)

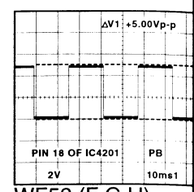

WF52 (F,G,H)

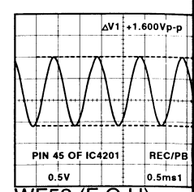

WF53 (F,G,H)

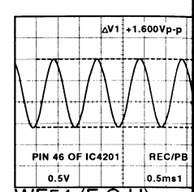

WF54 (F,G,H)

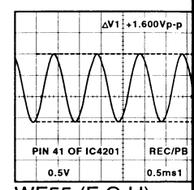

WF55 (F,G,H)

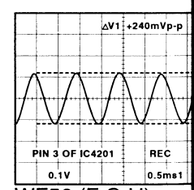

WF56 (F,G,H)

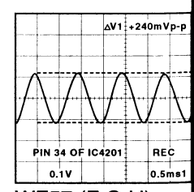

WF57 (F,G,H)

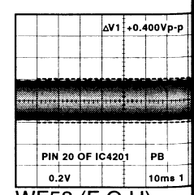

WF58 (F,G,H)

NOTE:
FOR SCHEMATIC DIAGRAM AND CIRCUIT BOARD LAYOUT NOTES,
REFER TO BEGINNING OF SCHEMATIC SECTION.

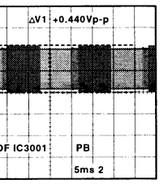

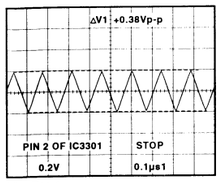

WF21

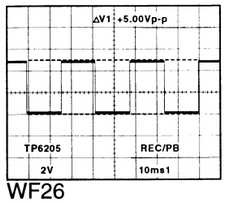

WF26

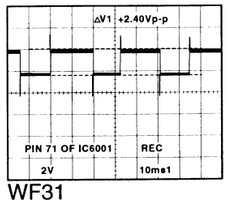

WF31

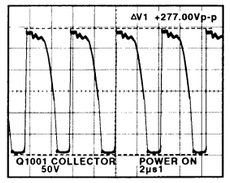

WF38

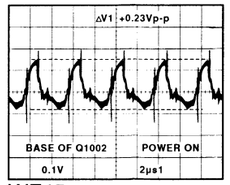

WF45

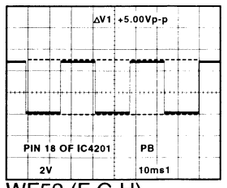

WF52 (F,G,H)

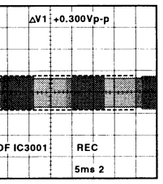

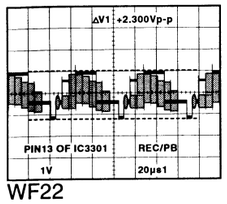

WF22

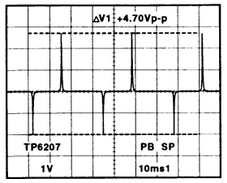

WF27

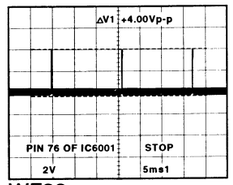

WF32

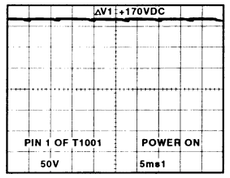

WF39

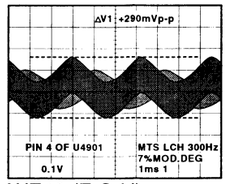

WF46 (F,G,H)

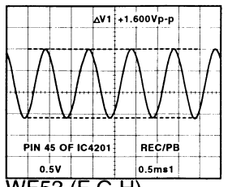

WF53 (F,G,H)

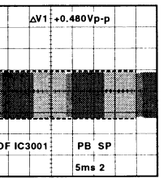

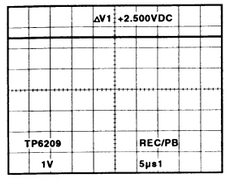

WF23

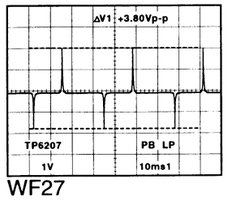

WF27

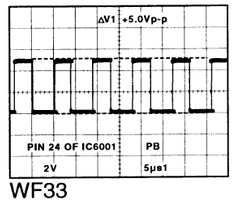

WF33

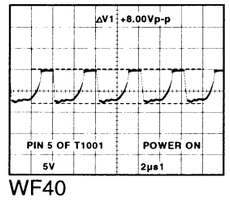

WF40

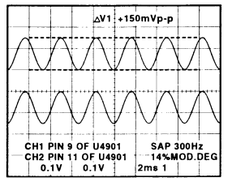

CH1 WF47 (F,G,H)
CH2 WF48 (F,G,H)

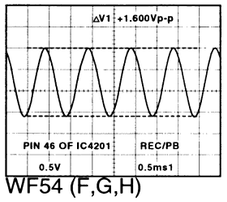

WF54 (F,G,H)

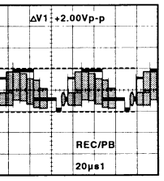

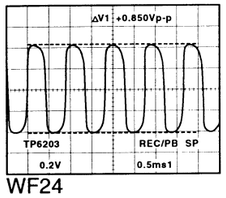

WF24

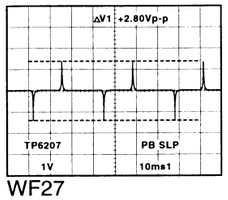

WF27

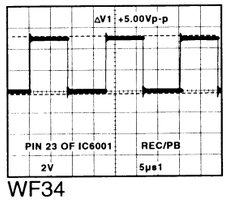

WF34

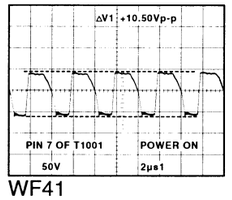

WF41

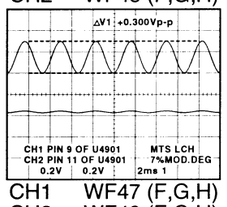

CH1 WF47 (F,G,H)
CH2 WF48 (F,G,H)

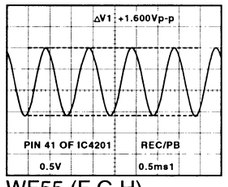

WF55 (F,G,H)

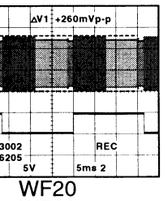

WF20
WF26

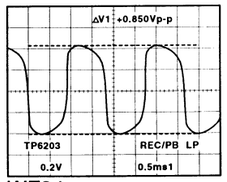

WF24

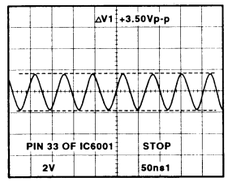

WF28

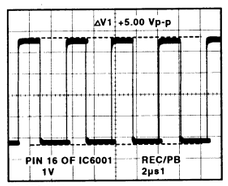

WF35

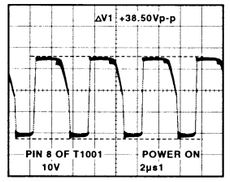

WF42

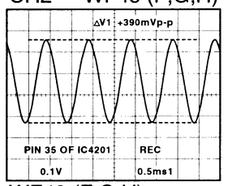

WF49 (F,G,H)

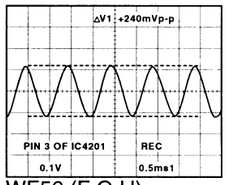

WF56 (F,G,H)

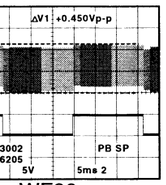

WF20
WF26

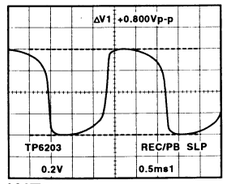

WF24

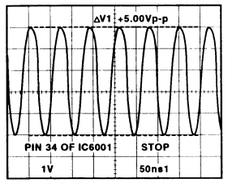

WF29

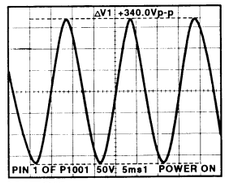

WF37

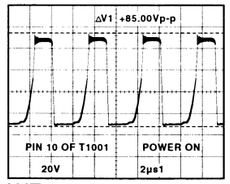

WF43

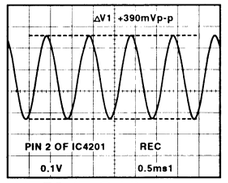

WF50 (F,G,H)

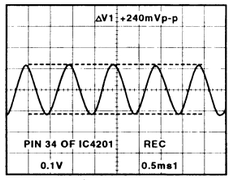

WF57 (F,G,H)

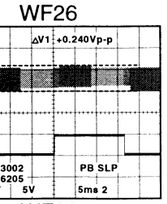

WF20
WF26

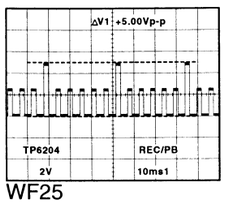

WF25

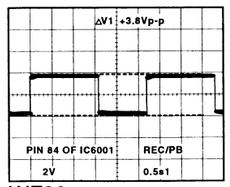

WF30

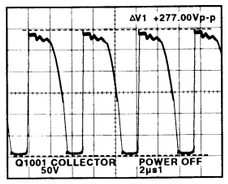

WF38

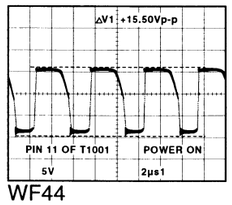

WF44

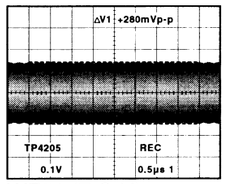

WF51 (F,G,H)

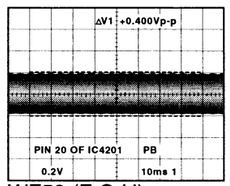

WF58 (F,G,H)

HEAD AMP C.B.A.(A)

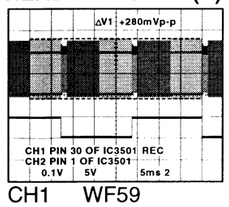

CH1 WF59
CH2 WF60

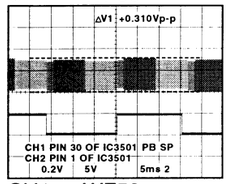

CH1 WF59
CH2 WF60

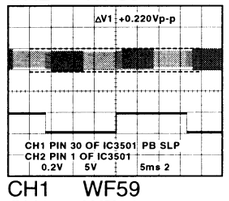

CH1 WF59
CH2 WF60

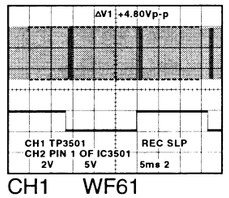

CH1 WF61
CH2 WF60

HEAD AMP C.B.A. (B,C,D,E)

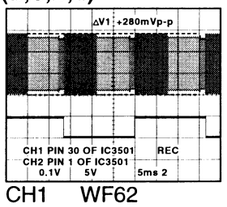

CH1 WF62
CH2 WF63

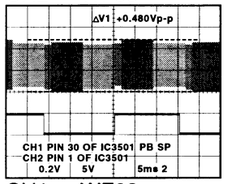

CH1 WF62
CH2 WF63

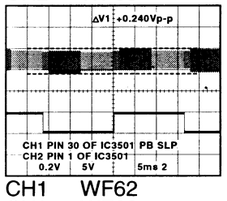

CH1 WF62
CH2 WF63

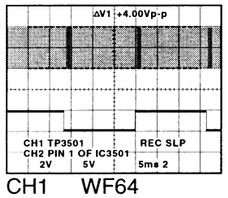

CH1 WF64
CH2 WF63

Hi-Fi AUDIO/VIDEO HEAD AMP C.B.A. (F,G,H)

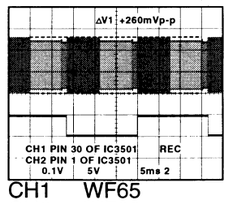

CH1 WF65
CH2 WF66

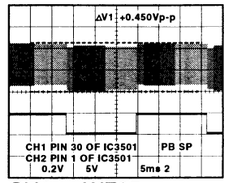

CH1 WF65
CH2 WF66

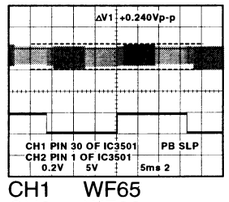

CH1 WF65
CH2 WF66

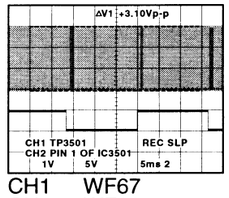

CH1 WF67
CH2 WF66

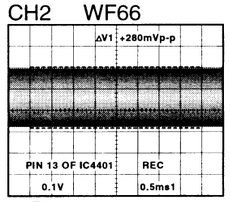

WF68

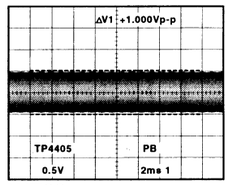

WF69

COMPARISON CHART
OF MODELS & MARKS

MODEL	MARK
VHQ720	A
PV-7400	B
PV-7401	C
PV-7401-K	D
VHQ740	E
PV-7450	F
PV-7451	G
VHQ760	H
Not Used	Z

BLOCK DIAGRAMS

POWER SUPPLY BLOCK DIAGRAM

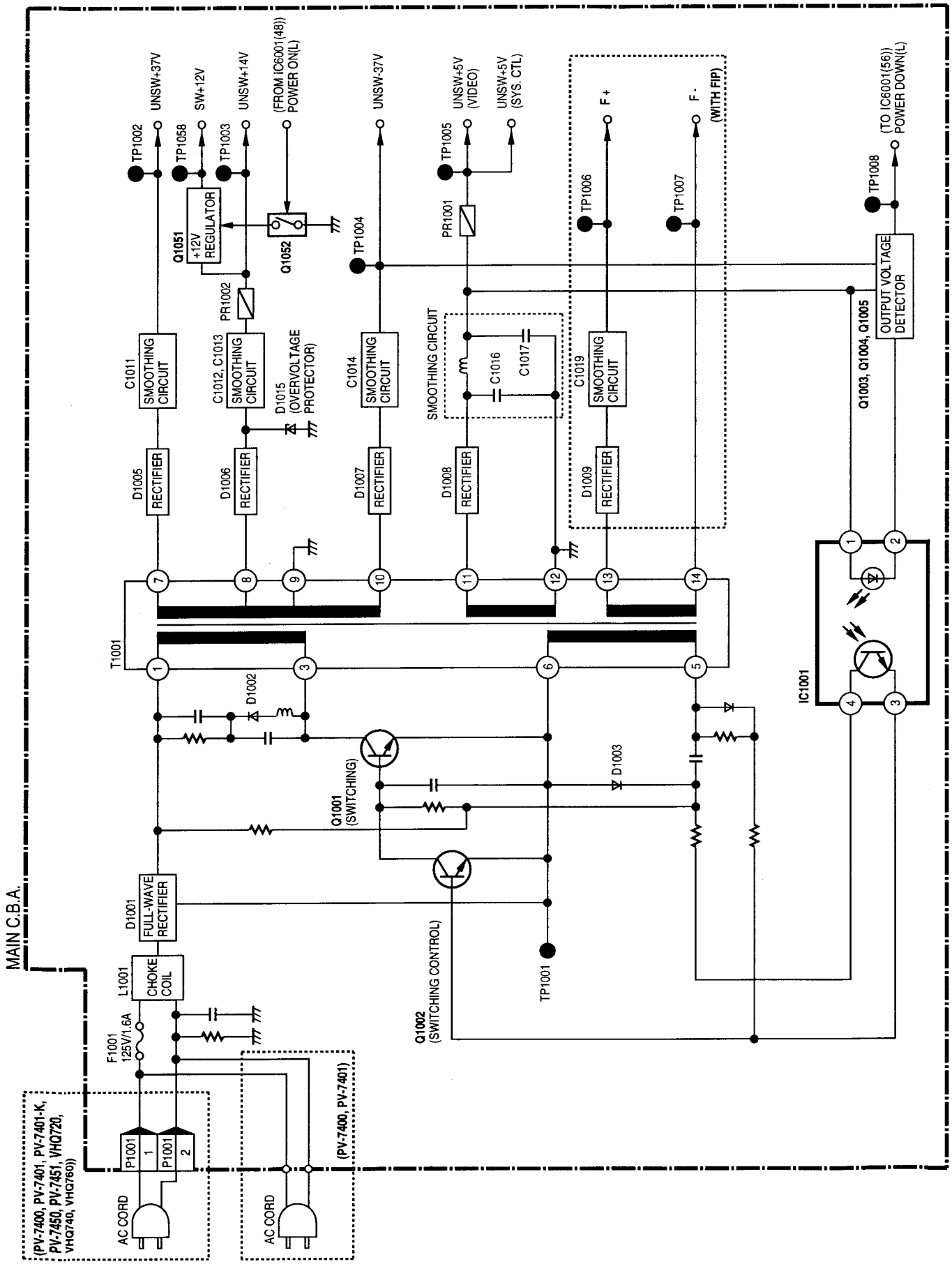

VIDEO SIGNAL PATH BLOCK DIAGRAM

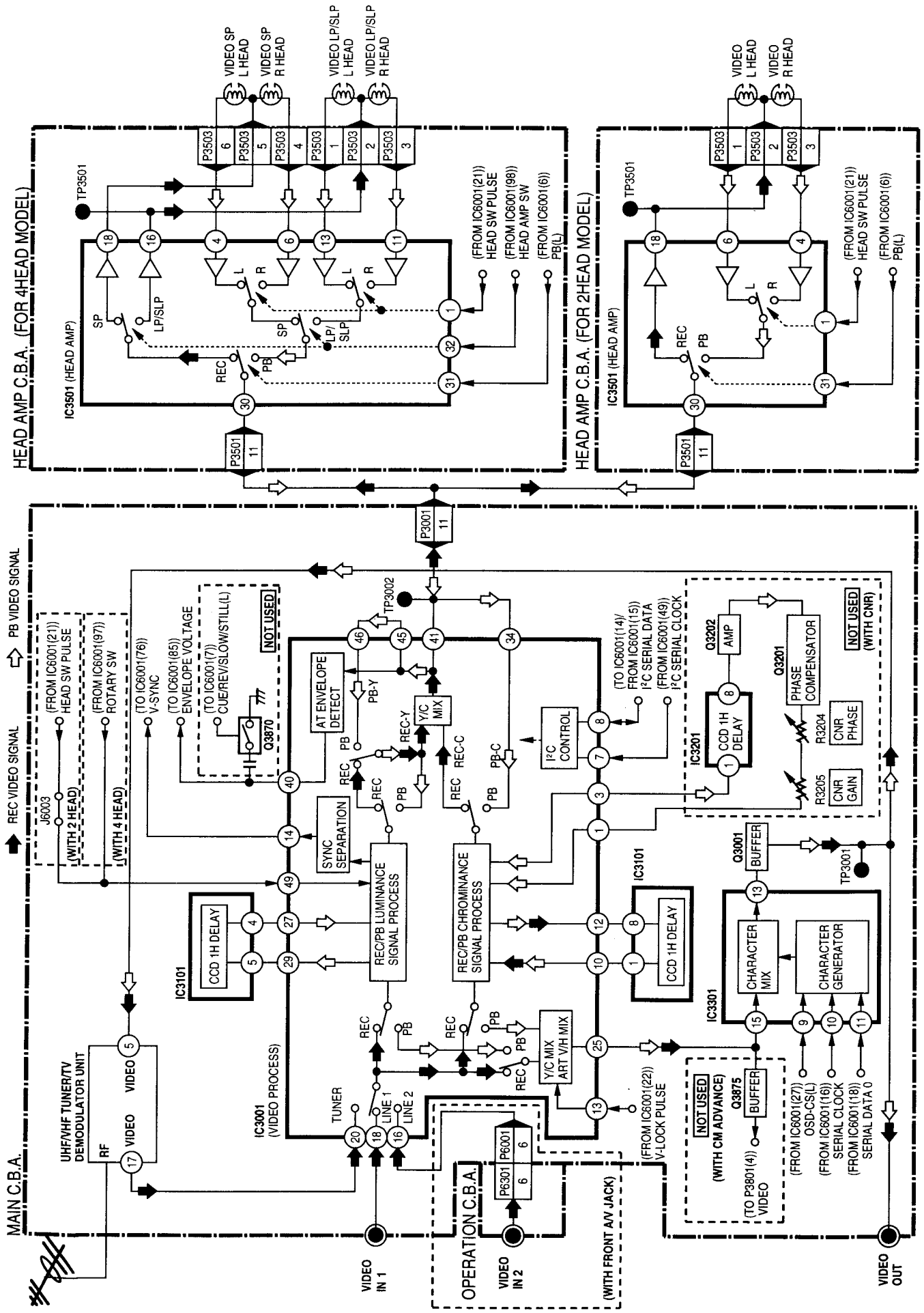

AUDIO SIGNAL PATH BLOCK DIAGRAM

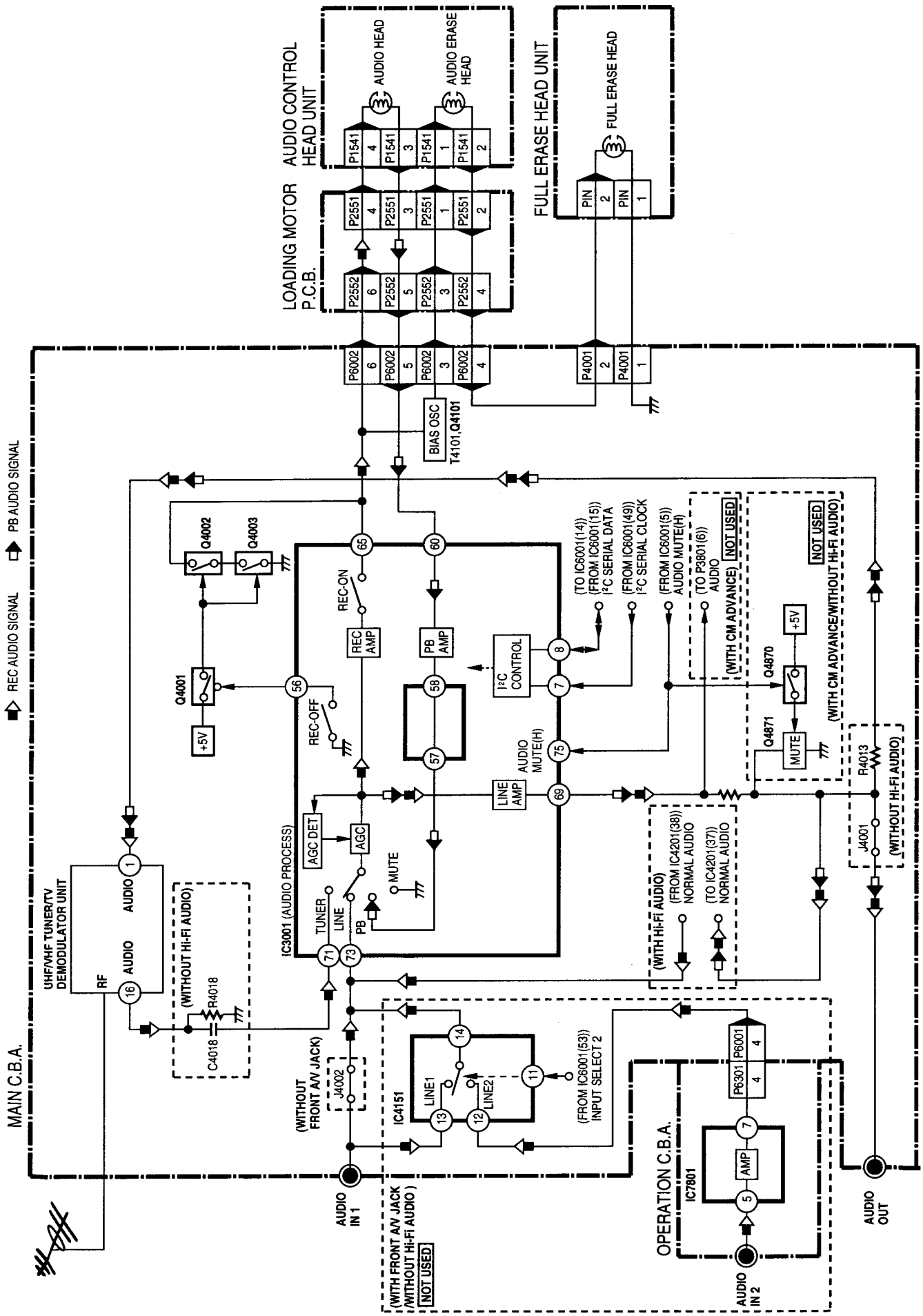

IC3001 VIDEO/AUDIO PROCESS IC-BLOCK DIAGRAM, AN3475FBP

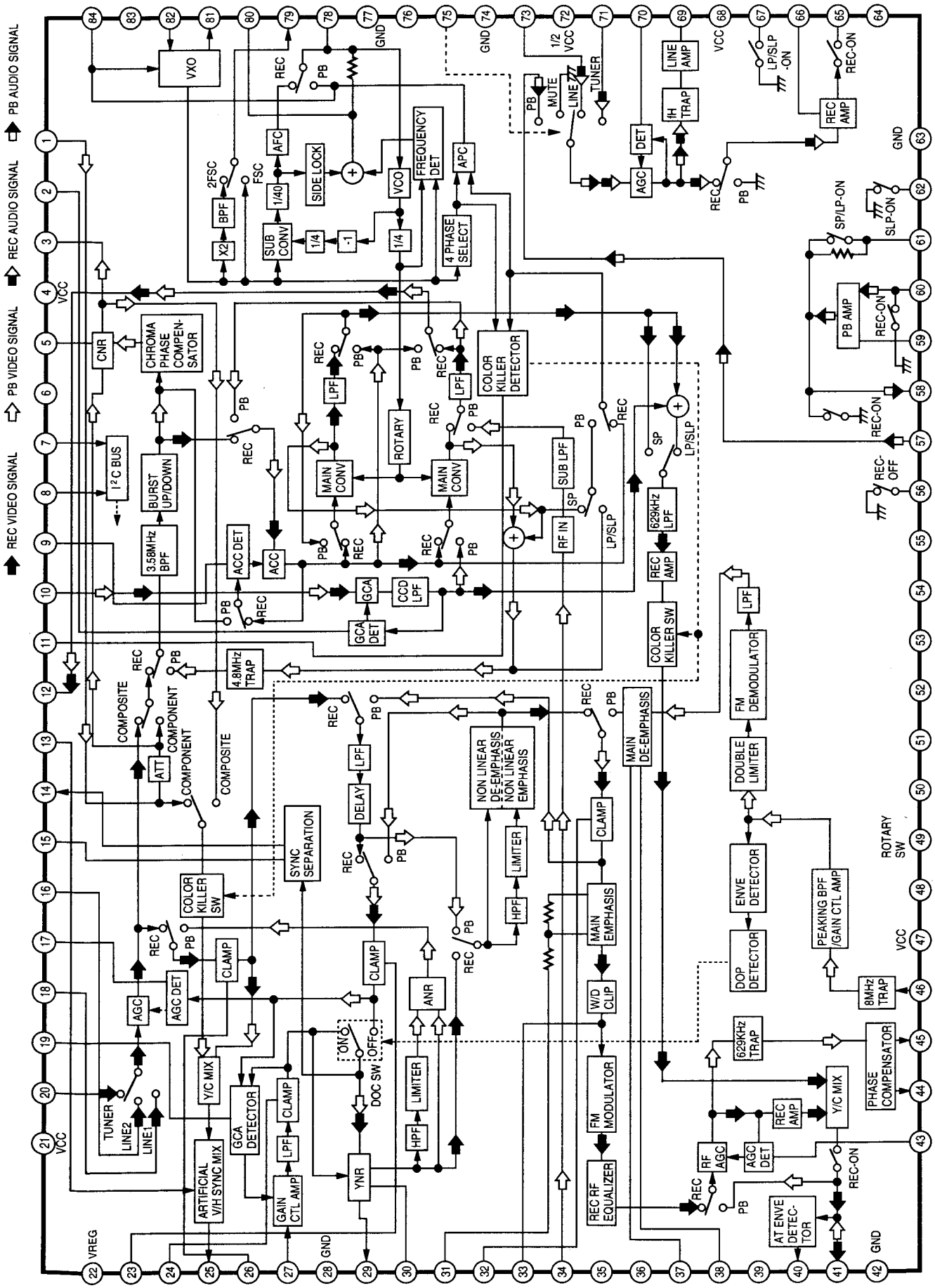

Hi-Fi AUDIO SIGNAL PATH BLOCK DIAGRAM

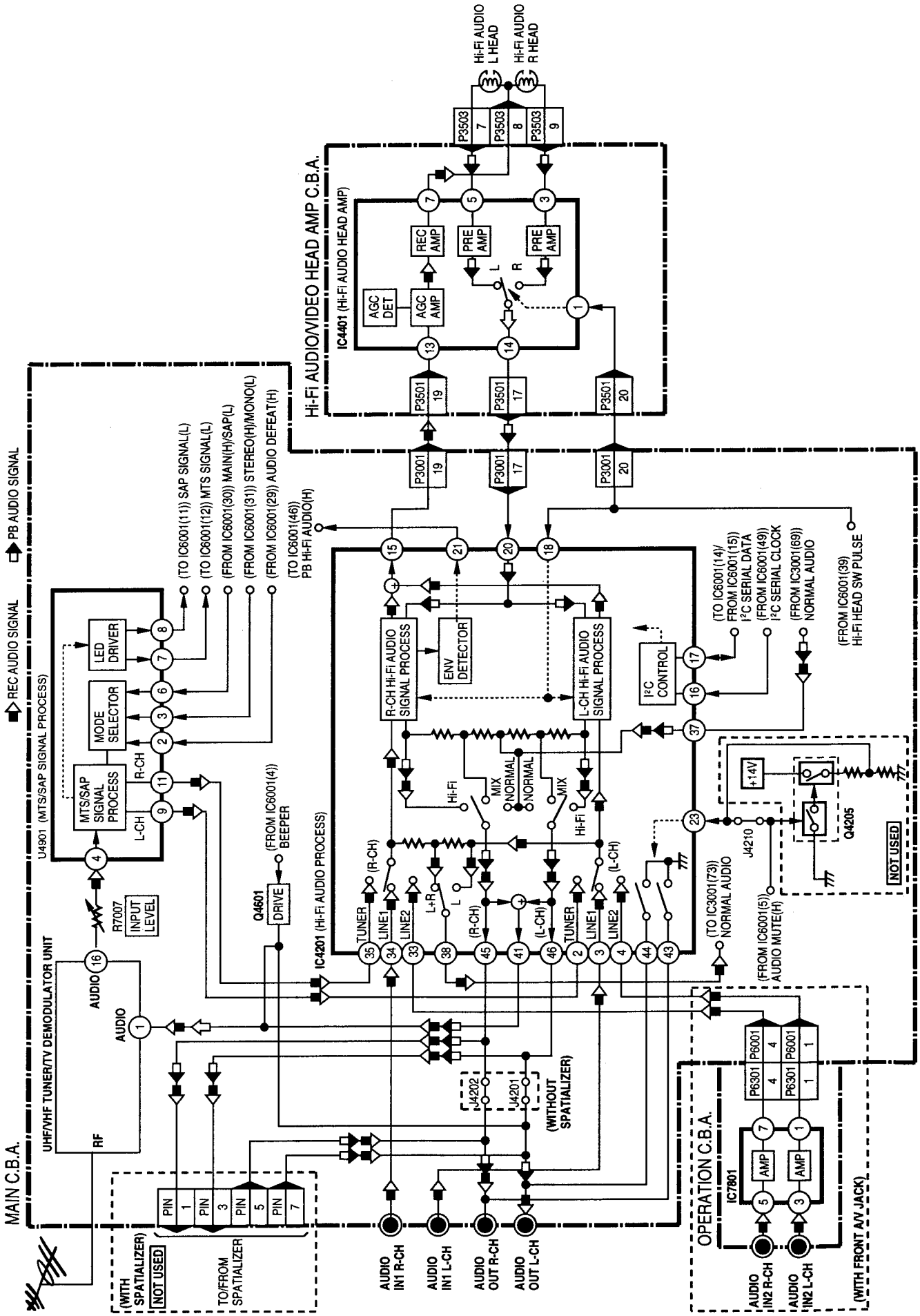

IC4201 Hi-Fi AUDIO PROCESS IC-BLOCK DIAGRAM, AN3962FB-V

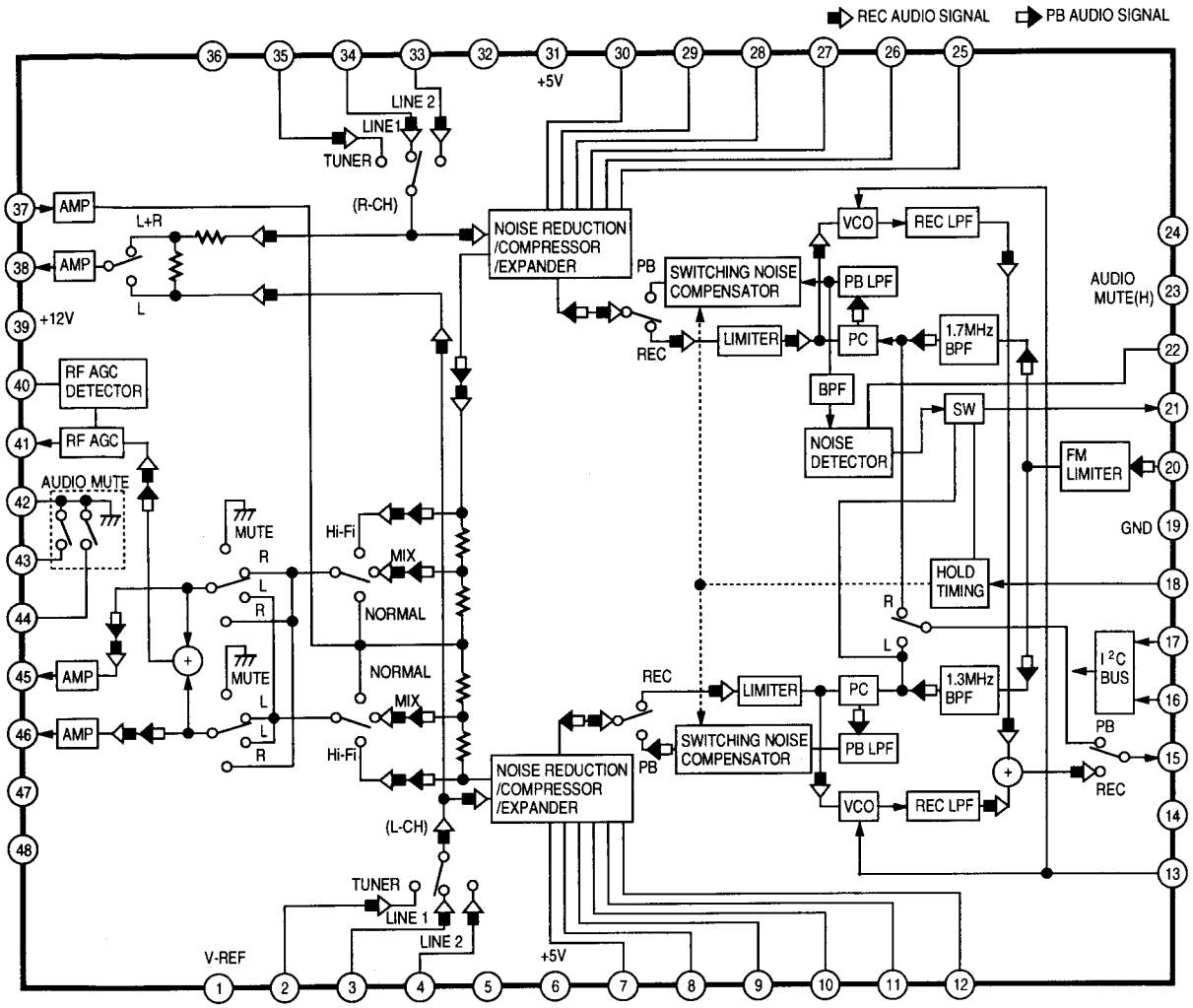

U4901 MTS/SAP AUDIO PROCESS IC-BLOCK DIAGRAM, VCRS0213

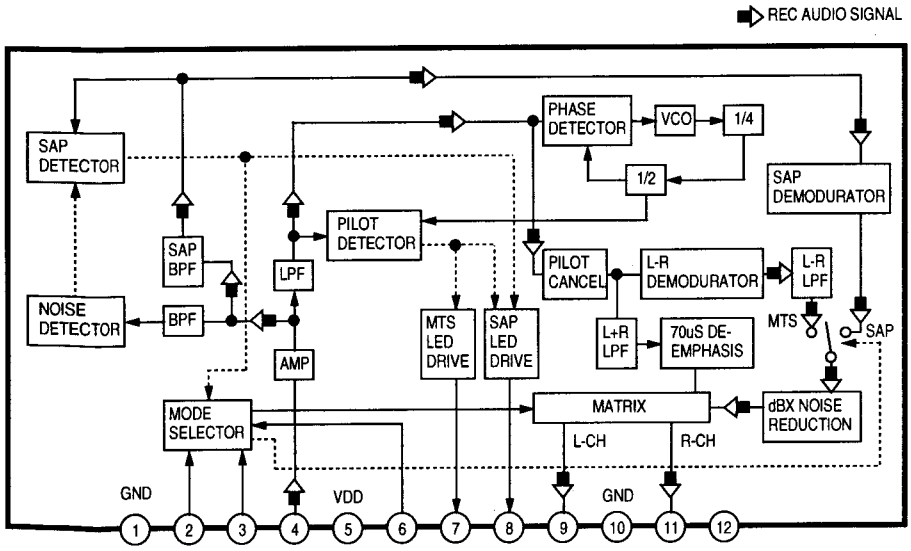

SYSTEM CONTROL BLOCK DIAGRAM

(PV-7400, PV7401, PV-7401-K, PV-7450, PV-7451)

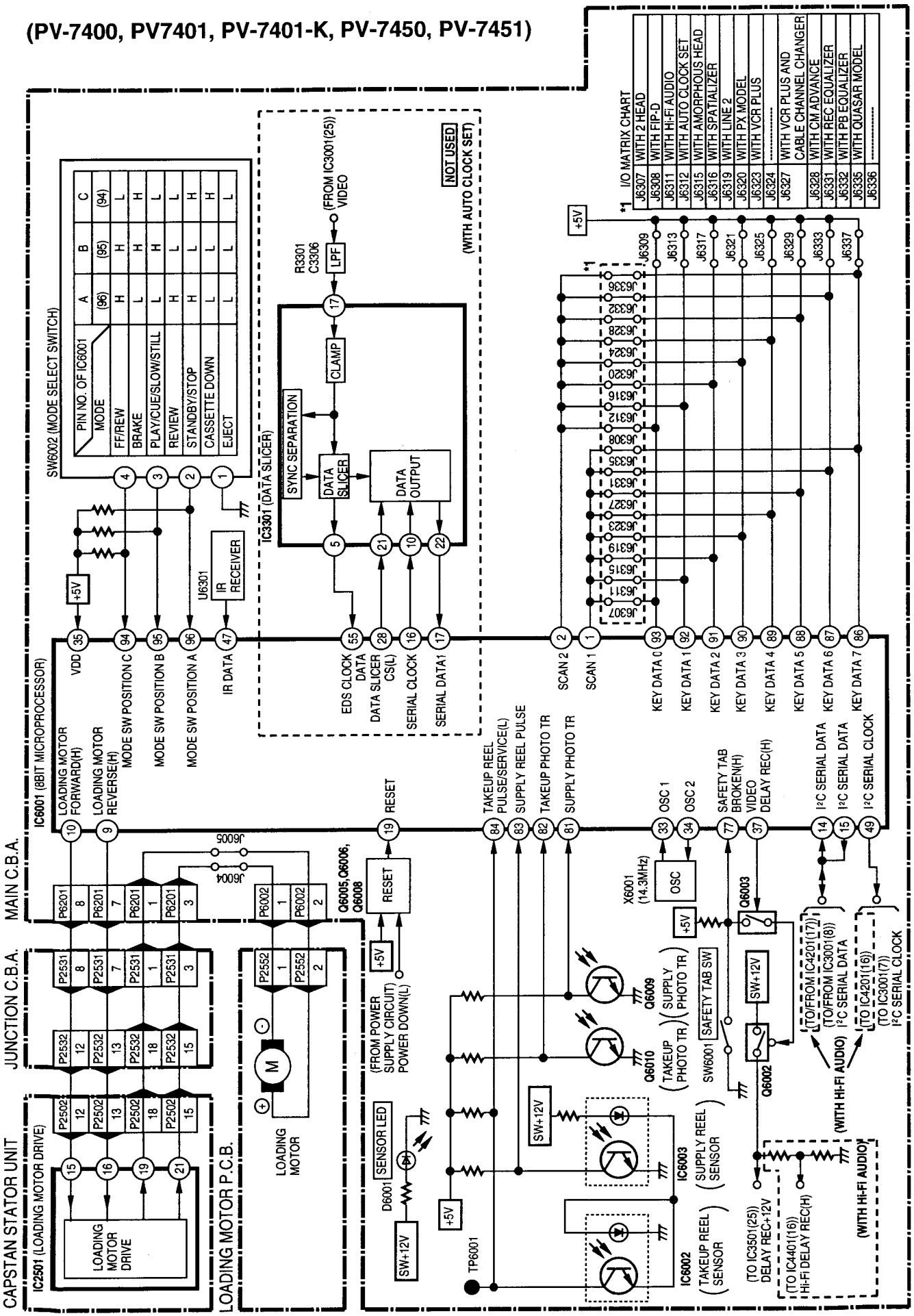

SYSTEM CONTROL BLOCK DIAGRAM (VHQ720, VHQ740, VHQ760)

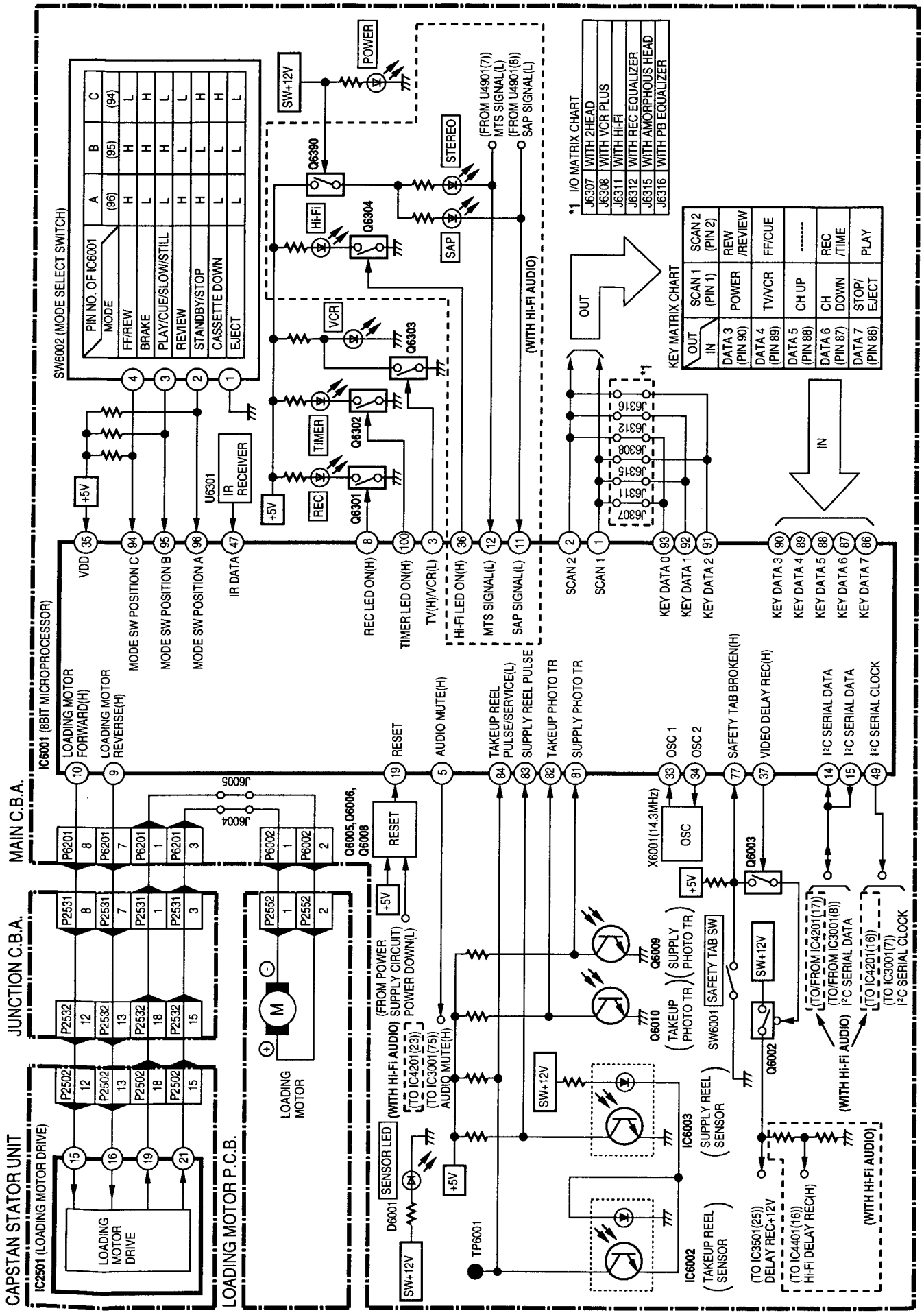

SERVO BLOCK DIAGRAM

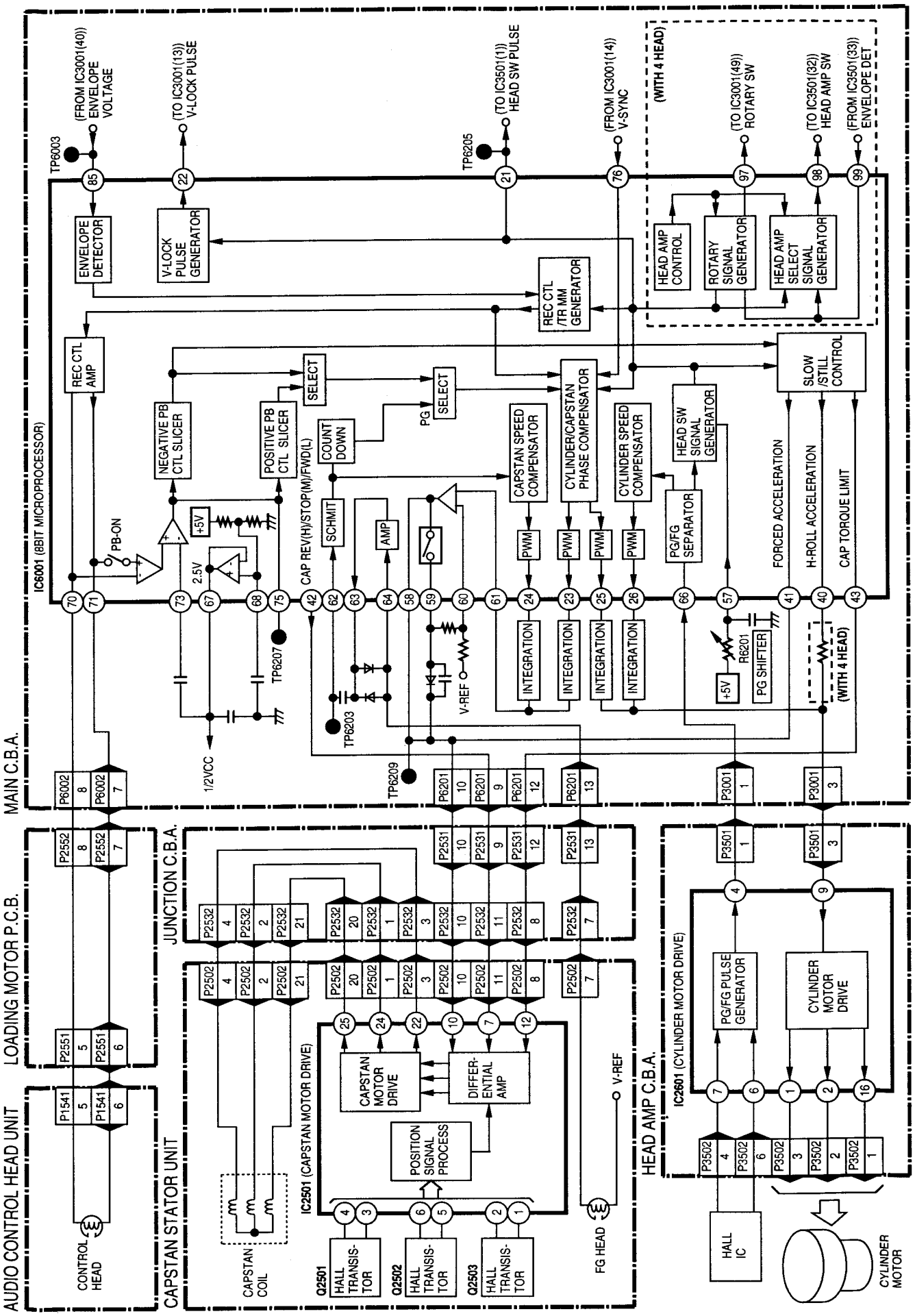

IC2601 CYLINDER MOTOR DRIVE IC-BLOCK DIAGRAM, AN3809K

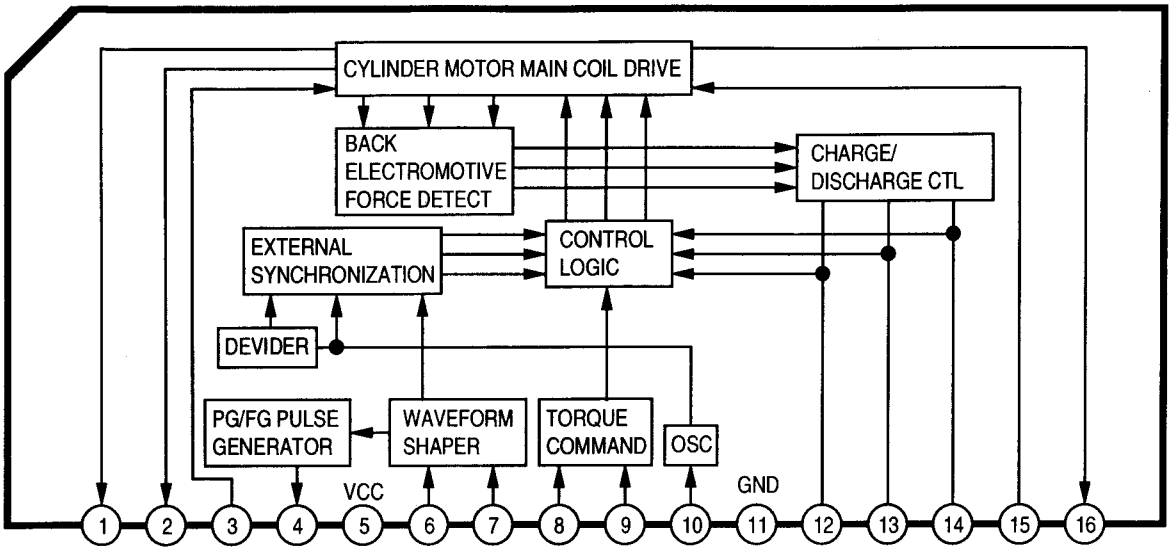

OPERATION BLOCK DIAGRAM

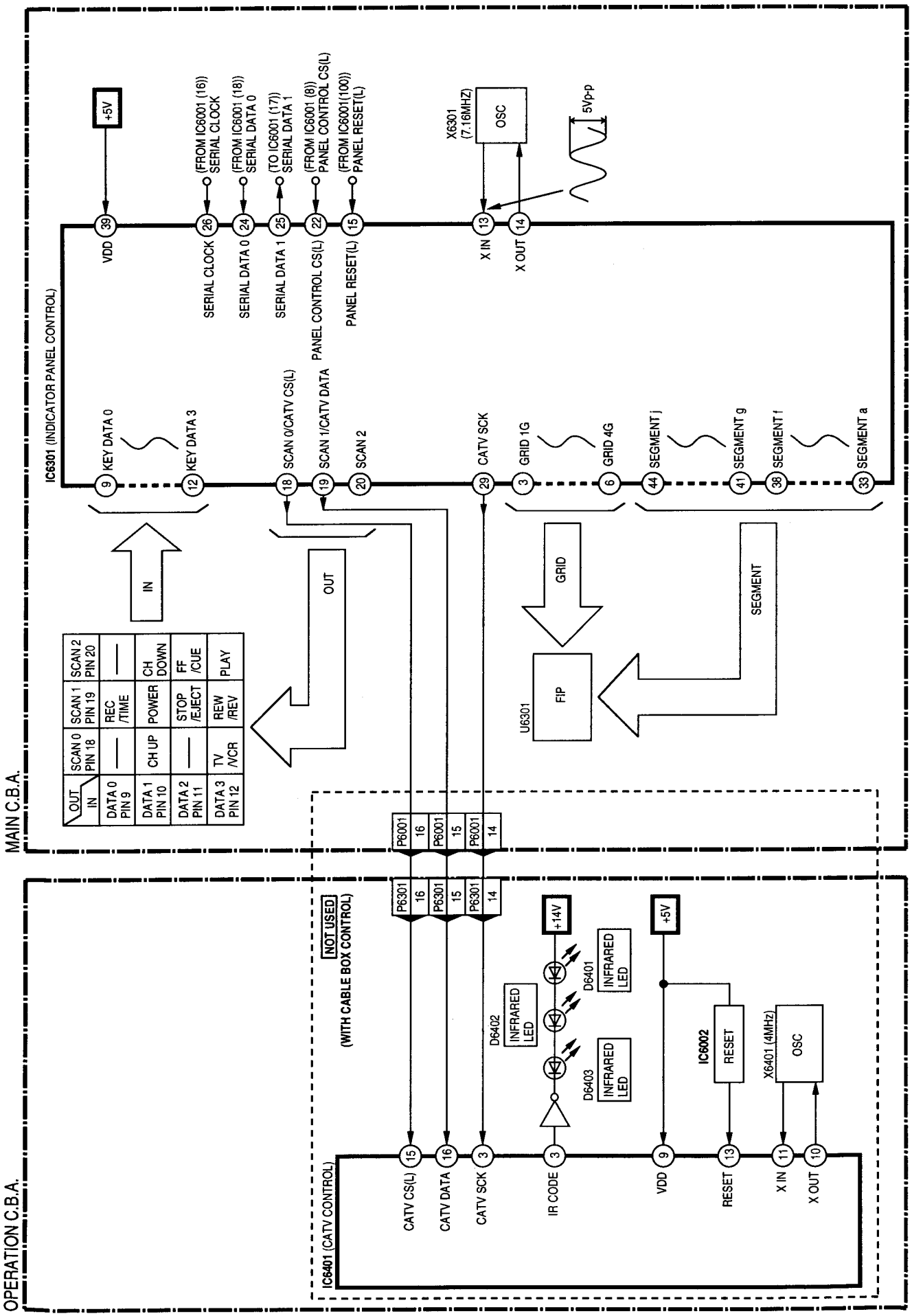

TROUBLESHOOTING HINTS

Power Supply Section

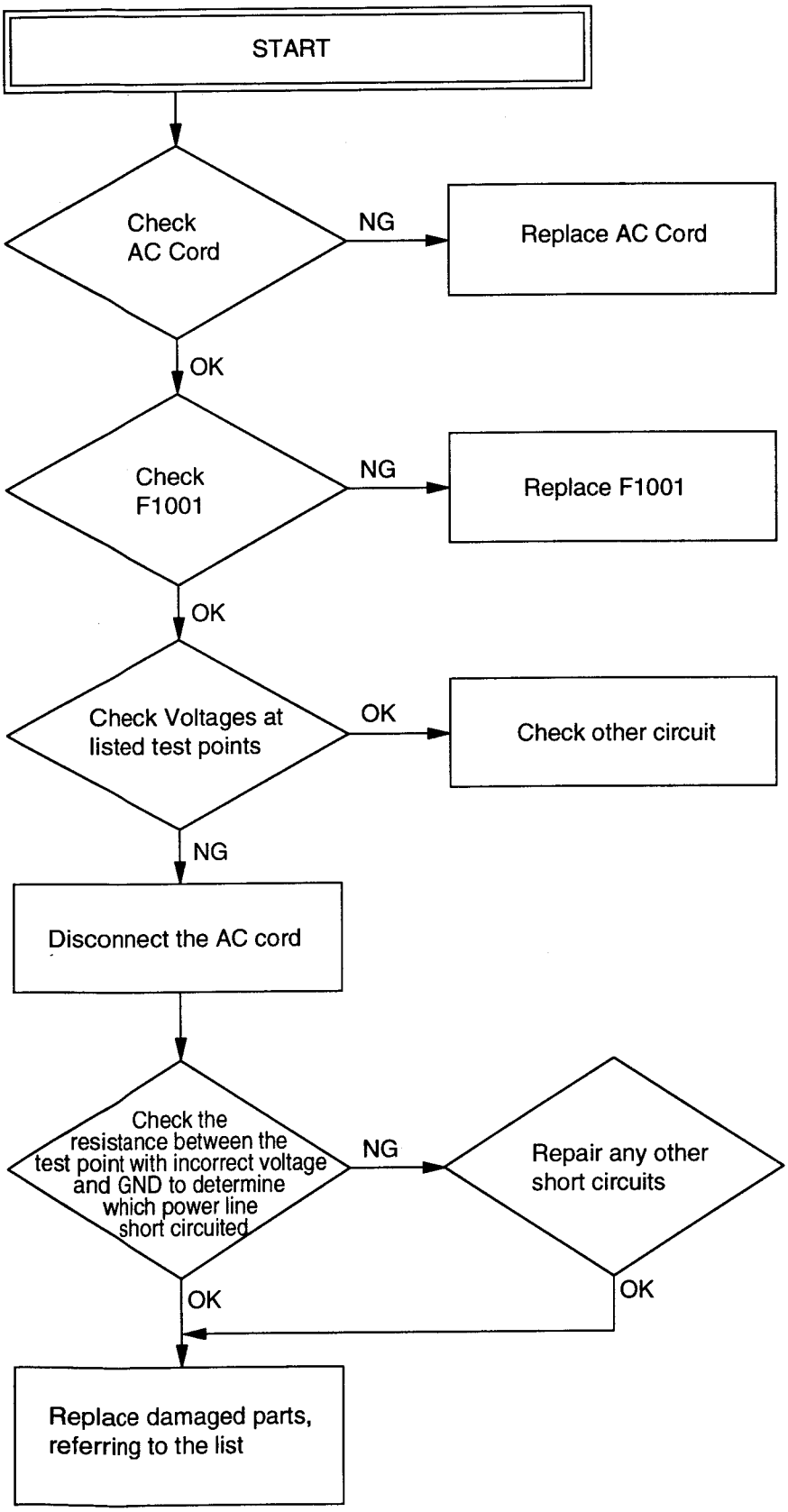

Voltage and Resistance of Power Line

Test Points (Main C.B.A.)	Voltage	Resistance
TP1002 (DC+37V)	36.5V	More than 500 ohm
TP1003 (DC+14V)	13.5V	More than 30 ohm
TP1004 (DC-30V)	-30.7V	More than 500 ohm
TP1005 (DC+5V)	5.2V	More than 25 ohm
TP1006 (F +)	-25.0V	More than 1k ohm
TP1007 (F -)	-20.0V	More than 1k ohm
TP1008 (Power Down (L))	5.2V	More than 500 ohm
TP1058 (DC+12V)	12.0V	More than 30 ohm

VOLTAGE: STOP mode under normal conditions.
RESISTANCE: Between Test points and GND with power off under normal conditions.
Note: The Voltages and Resistance listed are approximate.

When power line is short circuited, check the following parts. Replace if necessary.

(1). SHORT CIRCUIT AND REPLACEMENT PARTS ON POWER LINE.

	CONDITION OF SHORT CIRCUIT	DAMAGEABLE PARTS BY SHORT CIRCUIT
(1)	5V ➡ GND	*PR1001, *D1008, Q1005
(2)	37V ➡ GND	*D1005, *R1010
(3)	14V ➡ GND 12V ➡ GND	D1006, *D1015, Q1051, *Q1052 D1051, D1052, D1053, *PR1002
(4)	-30V ➡ GND	*R1011, *D1007, *R1024
(5)	37V ➡ 14V	D1006, *D1015, Q1051, *Q1052 D1051, D1052, D1053, *PR1002
(6)	-30V ➡ 5V	REPLACE THE ALL OF PARTS OF (1) AND (4)
(7)	14V ➡ 12V	*Q1051, *Q1052, D1051, D1052, D1053, *PR1002
(8)	37V ➡ POWER DOWN(L)	*Q1005, D1005, R1010

*NOTE1: When a short circuit occurs supplying the Power for a long time will cause the fuse to blow.
*NOTE2: Parts with * mark are the most susceptible to damage in case of short circuit. Please check them first.

(2). IN CASE OF FUSE(F1001) BLOW.
Replace Parts F1001, Q1001, Q1002, D1001(very rarely has problems), C1016, C1028, D1015.
Cause ➡ It may be caused by a short circuit of 5V or 14V.

(3). JUST AFTER TURNING POWER ON, ABNORMAL NOISE CAN BE HEARD FROM POWER SUPPLY CIRCUIT.
Replace Parts D1015, D1008, D1007, R1011, C1016.
Cause ➡ It may be caused by a short circuit of 5V, -30V, 14V.
In this condition, supplying the Power for a long time will causes the fuse to blow.

Video Section

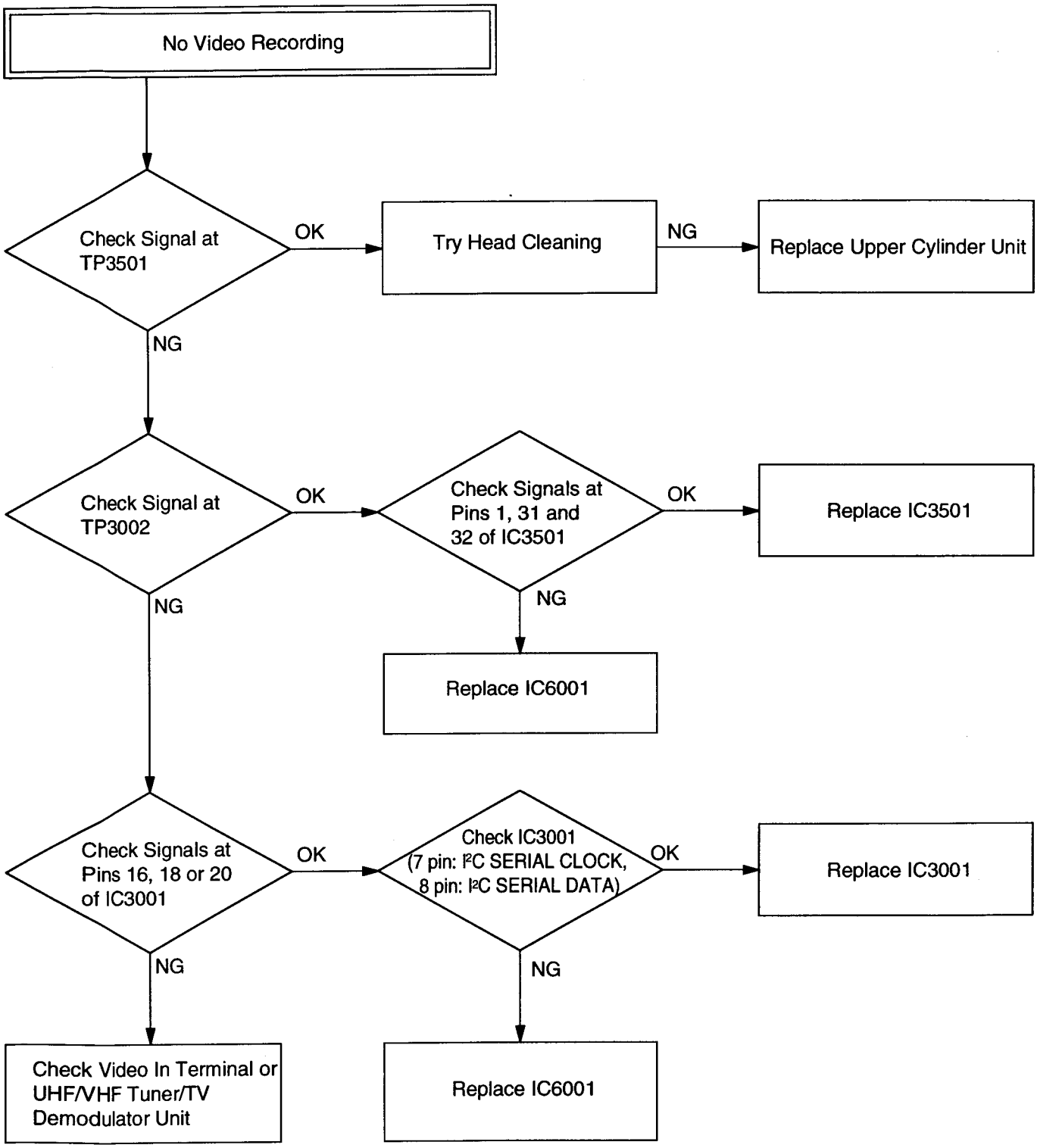

Video Section

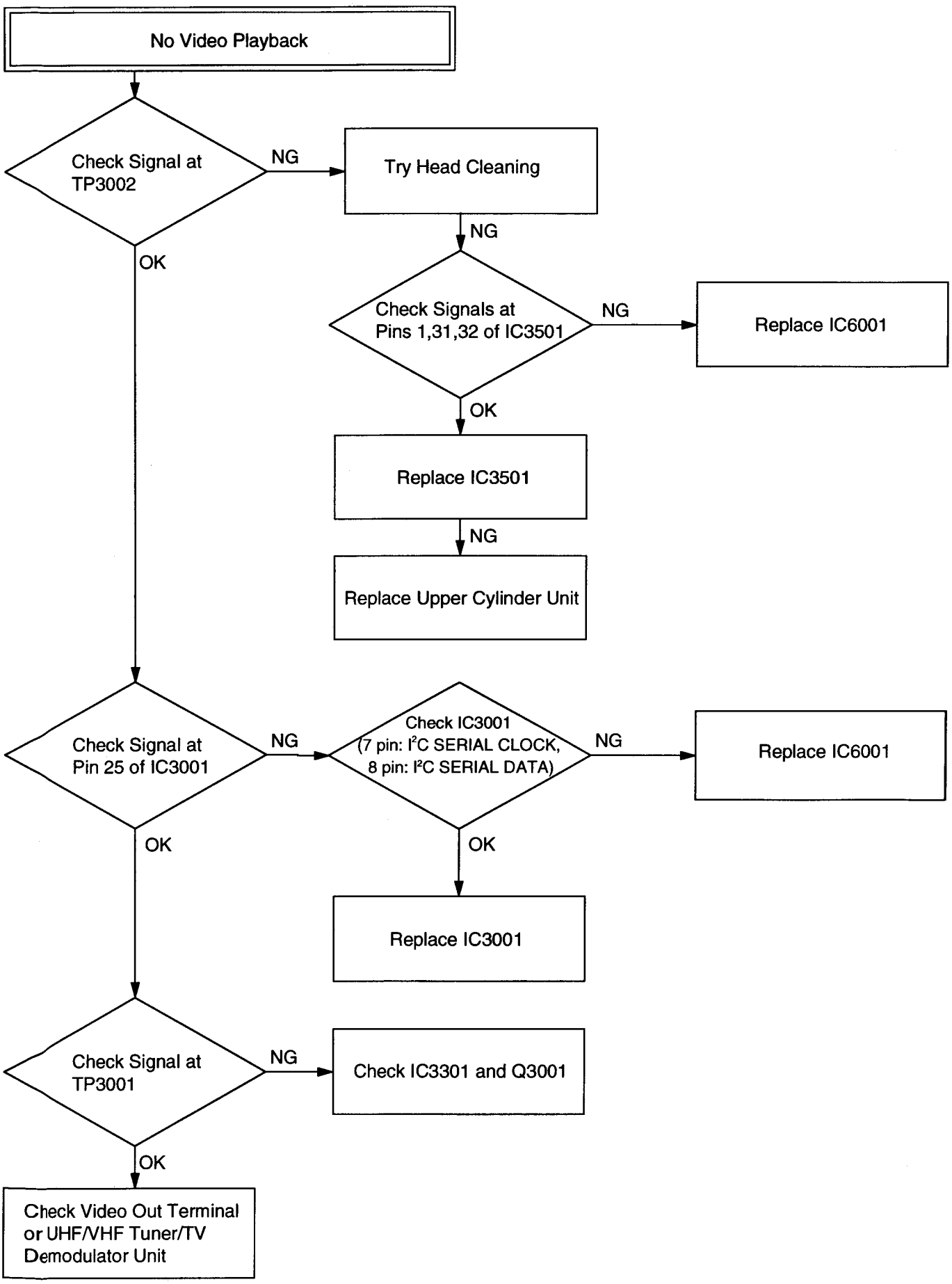

EXPLODED VIEWS

❶ MECHANISM (TOP) SECTION

LUBRICATION POINTS
When the marked parts are replaced, apply the recommended lubricants or adhesive for better maintenance of the unit.

Mark	Kind of Lubricant	Availability	Part Number
XXX	Silicon Grease	Available from Factory	VFK1301
OOO	Spindle Oil	Purchase from Local Supplier	- - - - - - -
ΔΔΔ	Grease	Available from Factory	VFKS0081

Note: Parts with no Ref. No. in "EXPLODED VIEW" are not supplied. And some Ref. No. will be skipped. Be sure to make your orders of replacement parts according to the parts list.

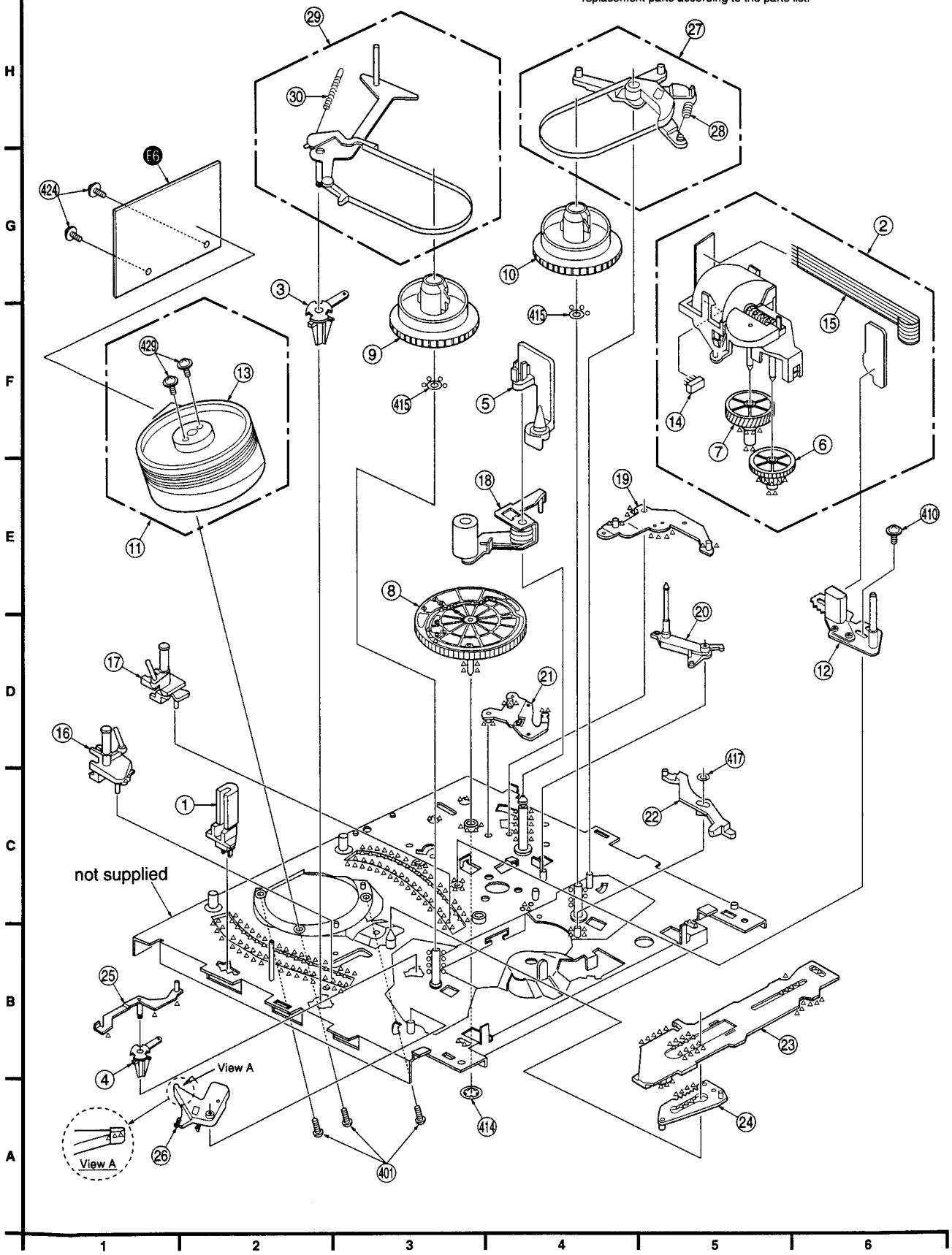

❷ MECHANISM (BOTTOM) SECTION

LUBRICATION POINTS
When the marked parts are replaced, apply the recommended lubricants or adhesive for better maintenance of the unit.

Mark	Kind of Lubricant	Availability	Part Number
×××	Silicon Grease	Available from Factory	VFK1301
○○○	Spindle Oil	Purchase from Local Supplier	- - - - - - - -
△△△	Grease	Available from Factory	VFKS0081

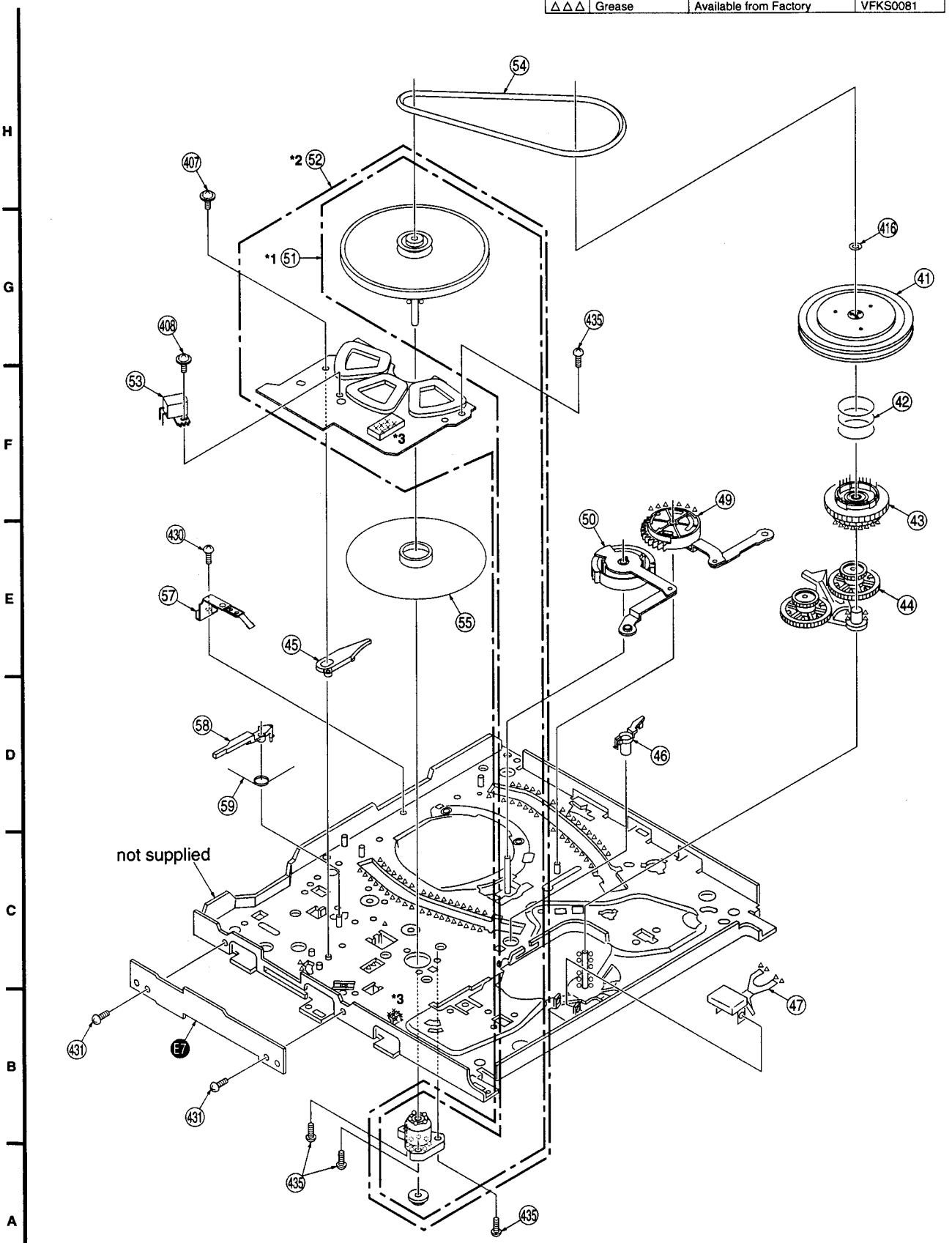

*1: Capstan Rotor Unit, Capstan Holder Unit, and Stopper are supplied as a Capstan Rotor Kit only.
*2: Capstan Stator Unit, Capstan Rotor Unit, Capstan Holder Unit, and Stopper are supplied as a Capstan Stator Kit only.
*3: Refer to "Capstan Stator Unit" of "Disassembly/Assembly Procedures of Mechanism" section for more information.

❸ CASSETTE UP COMPARTMENT SECTION

LUBRICATION POINTS
When the marked parts are replaced, apply the recommended lubricants or adhesive for better maintenance of the unit.

Mark	Kind of Lubricant	Availability	Part Number
XXX	Silicon Grease	Available from Factory	VFK1301
OOO	Spindle Oil	Purchase from Local Supplier	- - - - - - - -
ΔΔΔ	Grease	Available from Factory	VFKS0081

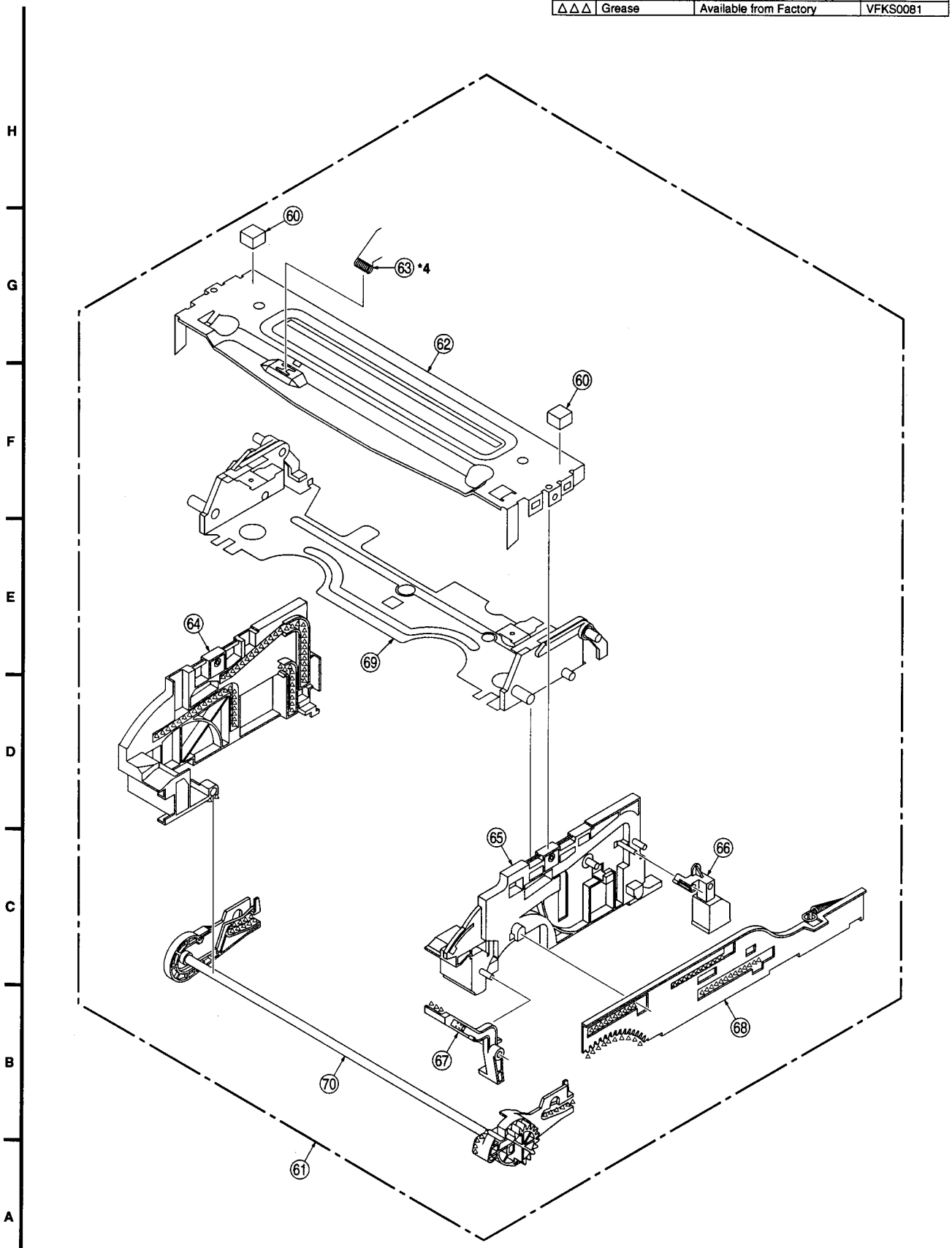

*4: As an ESD Countermeasure, the spring should be installed in the proper position.
Please refer to Disassembly/Assembly Procedure of Mechanical Section for more information.

❹ CHASSIS FRAME AND CASING PARTS SECTION

IMPORTANT SAFETY NOTICE
COMPONENTS IDENTIFIED BY THE SIGN ⚠ HAVE SPECIAL CHARACTERISTICS IMPORTANT FOR SAFETY. WHEN REPLACING ANY OF THESE COMPONENTS, USE ONLY THE SPECIFIED PARTS.

COMPARISON CHART OF MODELS & MARKS

MODEL	MARK
VHQ720	A
PV-7400	B
PV-7401	C
PV-7401-K	D
VHQ740	E
PV-7450	F
PV-7451	G
VHQ760	H

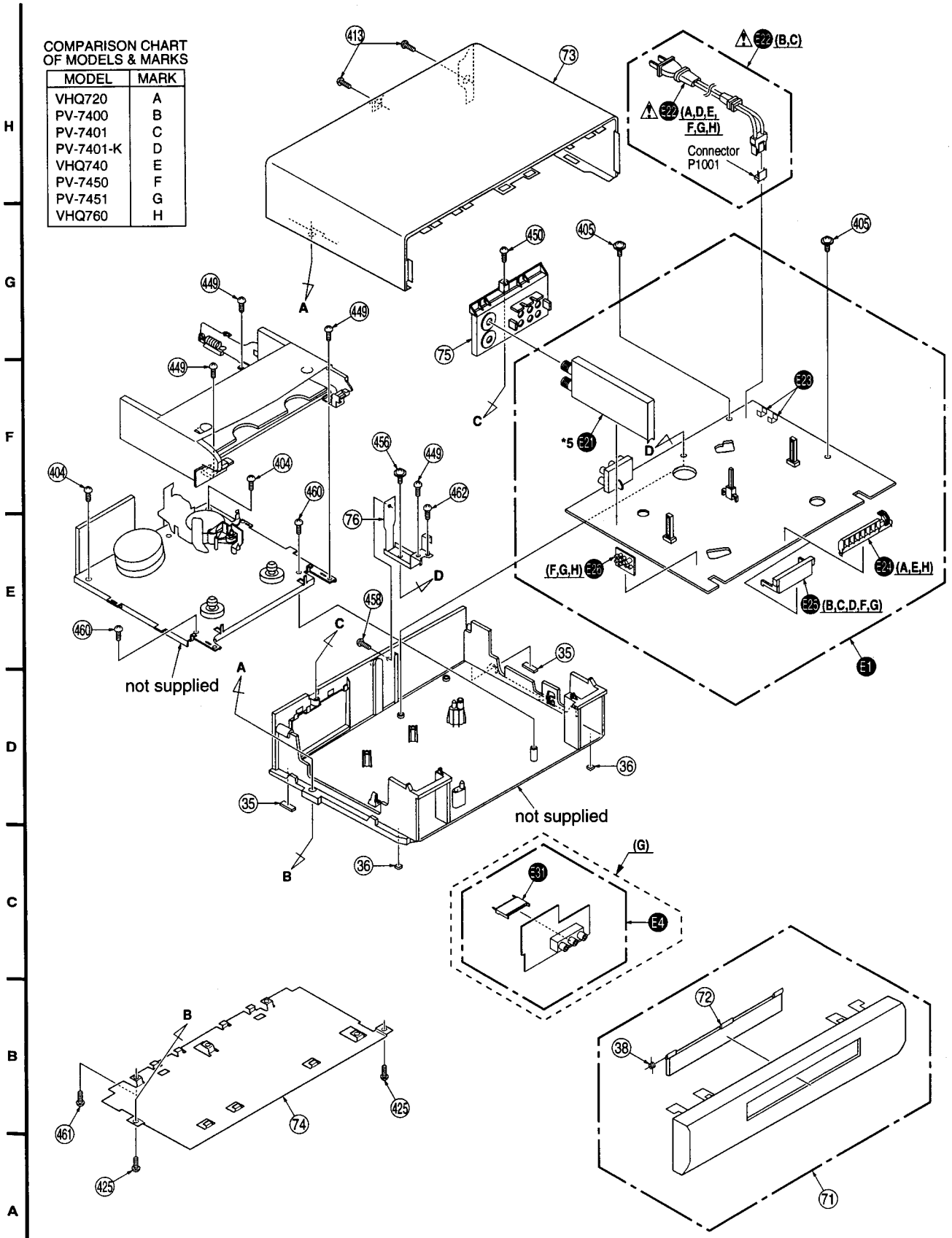

*5: Since the UHF/VHF TUNER/TV DEMODULATOR UNIT has already been pre-adjusted at the factory, do not try to adjust the UHF/VHF TUNER/TV DEMODULATOR UNIT. The UHF/VHF TUNER/TV DEMODULATOR UNIT replacement part is available as a complete assembly unit only.

❺ PACKING PARTS AND ACCESSORIES SECTION

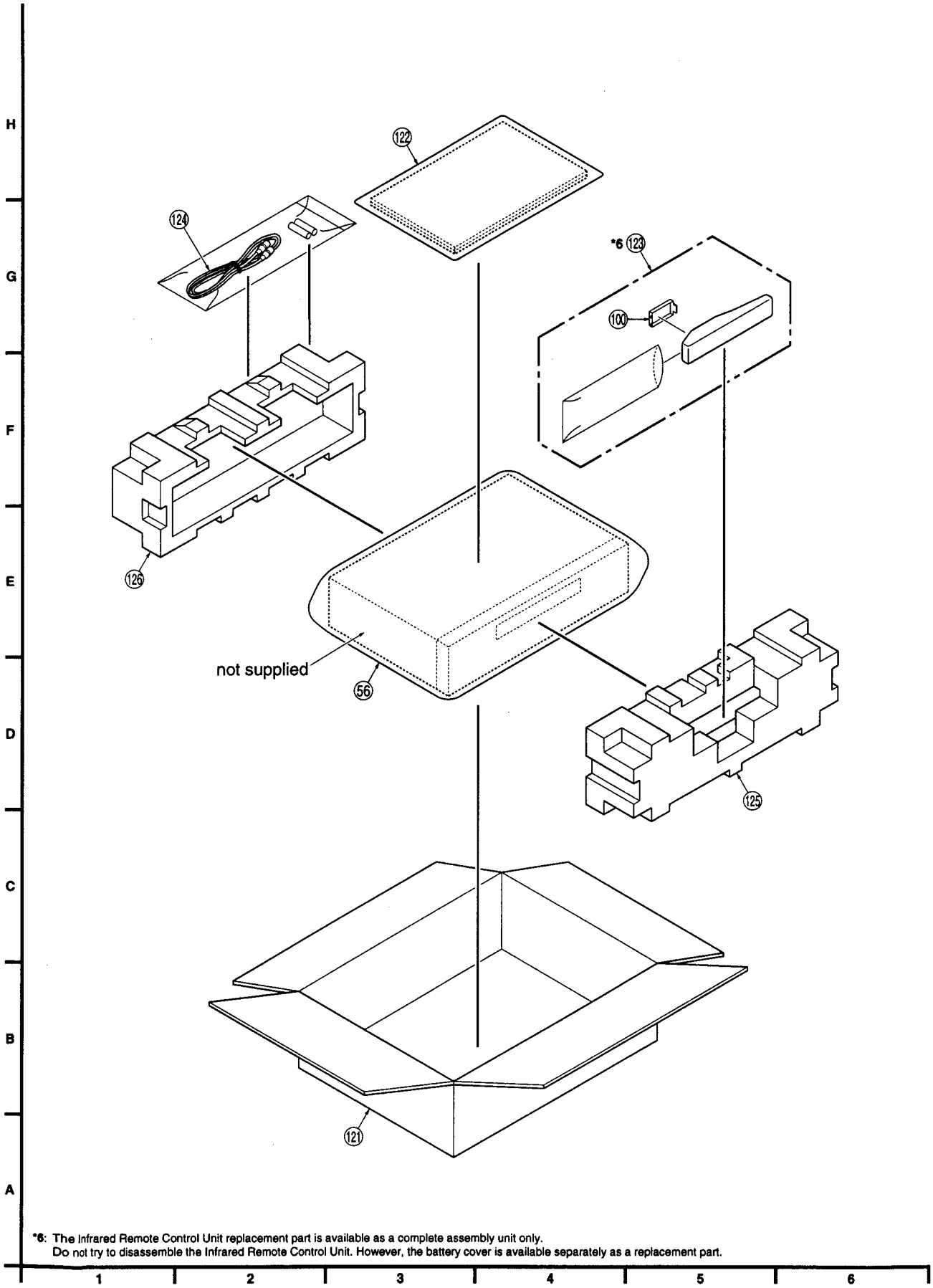

*6: The Infrared Remote Control Unit replacement part is available as a complete assembly unit only.
Do not try to disassemble the Infrared Remote Control Unit. However, the battery cover is available separately as a replacement part.

REPLACEMENT PARTS LISTS

BEFORE REPLACING PARTS, READ THE FOLLOWING:

1. Use only original replacement parts:
   To maintain original function and reliability of repaired units, use only original replacement parts which are listed with their part numbers in the parts list.
2. **IMPORTANT SAFETY NOTICE**
   Components identified by the sign ⚠ have special characteristics important for safety. When replacing any of these components, use only the specified parts.
3. SPECIAL NOTE
   All integrated circuits and many other semiconductor devices are electrostatically sensitive and therefore require the special handling techniques described under the "ELECTROSTATICALLY SENSITIVE (ES) DEVICES" section of this service manual.
4. Parts with no Ref. No. in "EXPLODED VIEW" are not supplied. And some Ref. No. will be skipped. Be sure to make your orders of replacement parts according to the parts list.
5. Parts different in shape or size may be used. However, only interchangeable parts will be supplied as service replacement parts.
6. The parts which "AKEI" is indicated in Remarks column will be supplied from AKEI factory.

Mechanical Replacement Notes

1. Section No. of parts shown in Exploded Views are indicated in the Remarks column.
2. Capstan Rotor Unit, Capstan Holder Unit, and Stopper are supplied as Capstan Rotor Kit (Ref No. 51) only.
3. Capstan Stator Unit, Capstan Rotor Unit, Capstan Holder Unit, and Stopper are supplied as a Capstan Stator Kit (Ref No. 52) only. When installing Capstan Stator Unit, be sure to apply Silicon Grease (VFK1301). Refer to "Capstan Stator Unit" of "DISASSEMBLY/ ASSEMBLY PROCEDURES OF MECHANISM" section.
4. Since the UHF/VHF TUNER/TV DEMODULATOR UNIT (Ref No. E21) has already been pre-adjusted at the factory, do not try to adjust the UHF/VHF TUNER/TV DEMODULATOR UNIT. The UHF/VHF TUNER/TV DEMODULATOR UNIT replacement part is available as a complete assembly unit only.
5. The Infrared Remote Control Unit (Ref No. 123) replacement part is available as a complete assembly unit only. Do not try to disassemble the Infrared Remote Control Unit. However, the battery cover is available separately as a replacement part.
6. Cut Washers (Ref No. 416 and 417) are not reusable. If removed, install a new one.
7. Main Cam Push Nut (Ref No. 414) is not reusable. If removed, install a new one.

Electrical Replacement Notes

1. Item numbers with capital letter E (Example: E1, E2,...) in the Ref. No. column are shown in the exploded views. The E item numbers are also printed on the same page at the top of the column.
2. The parts with "■" mark are supplied individually or as a unit. The parts with "▲" mark are supplied individually or as a unit, and are included in "■" parts listed directly above in the parts list.
3. Unless otherwise specified;
   All resistors are in ohms, 1/4W, +/-5%, carbon,
   K = 1,000 ohm, M = 1,000 kohm.
   All capacitors are in microfarads, P = micromicrofarad, +/-10%.
   All coils are in microhenries, M = 1,000 microhenry, +/-10%.
4. Abbreviation
   RTL: Retention Time Limited
   This indicates that the retention time is limited for this item. After the discontinuation of this item in production, it will no longer be available.
   NR: Non Repairable Board Ass'y
   MGF CHIP: Metal Glaze Film Chip
   C CHIP: Ceramic Chip
   COMPLX CMP: Complex Component
   W FLMPRF: Wirewound Flameproof
   C.B.A.: Circuit Board Assembly
   P.C.B.: Printed Circuit Board
   E.S.D.: Electrostatically Sensitive Devices
5. SERVICE OF CHIP PARTS
   When servicing chip parts, please use a soldering iron of less than 30 watts. Refer to "IC, TRANSISTOR AND CHIP PART INFORMATION" page.
6. The parts with "●" are 0 ohm resistor. When replacing, a wire can be substituted for a 0 ohm resistor.
7. AC cord replacement note
   for models PV-7400 and PV-7401:
   Either Type-A or B is used as a AC cord for these models. However, for parts standardization and interchangeability, Type-B will be supplied with Connector P1001 as a kit (Part No.: VJAS0195-FS) for replacement. When replacing AC cord on products using Type-A, connect Connector P1001 to Main C.B.A. with solder and connect AC cord to Connector P1001.

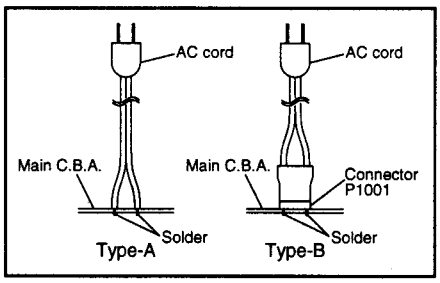

8. IC6001 replacement note:

Model No.	products	replacement parts
PV-7400 PV-7401 PV-7401-K PV-7450 PV-7451	MN675048A5A3 MN675048A5A2 MN675048A5A1 MN675048A5A	MN675048A5A3
VHQ720 VHQ740 VHQ760	MN675048A5B2 MN675048A5B1 MN675048A5B	MN675048A5B2

9. Main C.B.A. replacement note:

Model No.	products	replacement parts
PV-7400	VEPS6023GH VEPS6023GF VEPS6023GK	VEPS6023GH
PV-7401	VEPS6023GJ VEPS6023GA VEPS6023GL	VEPS6023GJ
PV-7450	VEPS6023HH VEPS6023HF	VEPS6023HH
PV-7451	VEPS6023HJ VEPS6023HA	VEPS6023HJ

MECHANICAL REPLACEMENT PARTS LIST

COMPARISON CHART OF MODELS & MARKS

MODEL	MARK	MODEL	MARK
VHQ720	A	VHQ740	E
PV-7400	B	PV-7450	F
PV-7401	C	PV-7451	G
PV-7401-K	D	VHQ760	H

<The complete Exploded Views are shown in this manual.>

EXPLODED VIEWS

❶ MECHANISM (TOP) SECTION

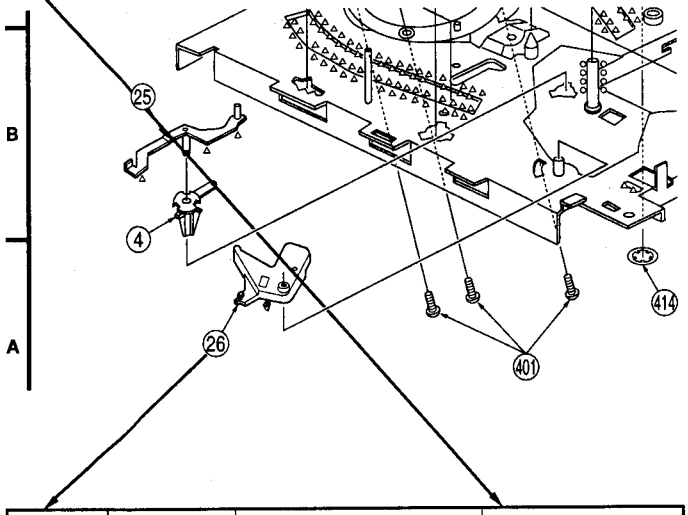

Ref. No.	Part No.	Part Name	Remarks
		MECHANISM PARTS ON CHASSIS	
			(Section No.)
1	VBSS0032	FULL ERASE HEAD	1
2	VXKS0851	MOTOR BLOCK ASS'Y	1
3	VDBS0349	TENSION ARM BOSS	1
4	VDBS0351	S BRAKE ARM BOSS	1
5	VMDS0971	OPENER PIECE	1
6	VDGS0428	WORM WHEEL GEAR	1
7	VDGS0429	INTERMEDIATE GEAR	1
8	VDGS0430	MAIN CAM GEAR	1
9	VDRS0054	S REEL TABLE	1
10	VDRS0055	T REEL TABLE	1
11		CYLINDER UNIT	
	VEGS0395	(A)	1
	VEGS0397	(B,C,D,E)	1
	VEGS0399	(F,G,H)	1
12	VEHS0558	AUDIO CONTROL HEAD UNIT	1
13		UPPER CYLINDER UNIT	
	VEHS0553	(A)	1
	VEHS0554	(B,C,D,E)	1
	VEHS0555	(F,G,H)	1
14	VJSS0882	CONNECTOR 8P	1
15	VJWS6JB100LL	COMMU CABLE W/OUT PLUG,12V	1
16	VXDS0198	LOADING POST BASE-S UNIT	1
17	VXDS0195	LOADING POST BASE-T UNIT	1
18	VXLS1058	PINCH ARM UNIT	1
19	VMLS0978	MAIN LEVER DRIVE ARM	1
20	VXLS1063	P5 ARM UNIT	1
21	VMLS0976	DRIVE RACK ARM	1
22	VMLS0972	CHANGING LEVER A	1
23	VMLS0977	MAIN LEVER	1
24	VXLS1072	LOADING RACK UNIT	1
25	VXLS1061	S BRAKE ARM UNIT	1
26	VMLS0982	S SPRING ARM	1
27	VXLS1062	T BRAKE UNIT	1
28	VMBS1150	T BRAKE SPRING	1
29	VXLS1074	TENSION ARM UNIT	1
30	VMBS1164	TENSION SPRING	1

Ref. No.	Part No.	Part Name	Remarks
35	VKAS0047	RUBBER FOOT	4
36	VKAS0060	RUBBER FOOT	4
38	VMBS1161	CASSETTE DOOR SPRING	4
41	VXPS0379	CENTER CLUTCH UNIT	2
42	VMBS1151	CHANGING GEAR SPRING	2
43	VDGS0425	CHANGING GEAR	2
44	VXLS1053	IDLER ARM UNIT	2
45	VMDS0985	PCB HOLDER	2
46	VMDS0982	MAIN LEVER GUIDE	2
47	VMLS0973	CHANGING LEVER B	2
49	VXLS1054	S LOADING ARM UNIT	2
50	VXLS1056	T LOADING ARM UNIT	2
51	VXPS0382K	CAPSTAN ROTOR KIT	2
52	VEMS0316K	CAPSTAN STATOR KIT	2
53	VBKS0040	FG HEAD	2
54	VDVS0087	CAPSTAN BELT SQUARE,ELASTOMER	2
		2MM	
55	VMAS2135	SUB ROTOR	2
56	VPFS0095	SHEET,POLYETHYLENE	5
57	VXBS0061	GROUNDING PLATE UNIT	2
58	VXLS1070	SS BRAKE ARM UNIT	2
59	VMBS1155	SS BRAKE SPRING	2
60	VMFS0311	CUSHION	3
61	VXYS1197	CASSETTE UP ASS'Y	3
62	VMAS2131	TOP PLATE	3
63	VMBS1159	GROUNDING SPRING	3
64	VMDS0976	SIDE PLATE L	3
65	VMDS0974	SIDE PLATE R	3
66	VMDS0979	SENSOR COVER	3
67	VMLS0987	OPENER LEVER	3
68	VXLS1064	DRIVE RACK UNIT	3
69	VXAS4404	HOLDER UNIT	3
70	VXLS1065	WIPER ARM UNIT	3
71		FRONT PANEL ASS'Y	
	VYPS6696	(A)	4
	VYPS6668	(B)	4
	VYPS6660	(C,D)	4
	VYPS6697	(E)	4
	VYPS6670	(F)	4
	VYPS6672	(G)	4
	VYPS6698	(H)	4
72		CASSETTE DOOR-LID	
	VGPS4140	(A)	4
	VGPS4141	(E)	4
	VGPS4098	(H)	4
		CASSETTE DOOR-LID UNIT	
	VYPS6666	(B,C,D)	4
	VYPS6667	(F)	4
	VYPS6675	(G)	4
73		TOP COVER	
	VKMS2393	(A,E,H)	4
	VKMS2356	(B,C,D,F)	4
	VKMS2392	(G)	4
74		BOTTOM PANEL	
	VKUS0271	(A,B,C,D,E)	4
	VKUS0270	(F,G,H)	4
75		REAR PANEL	
	VGPS4102	(A,B,C,D,E)	4
	VGPS4103	(F,G,H)	4
76	VMAS2136	CHASSIS ANGLE	4
100	VKFS2221	BATTERY COVER	5
121		PACKING CASE,PAPER	
	VPGS3799	(A)	5
	VPGS3788	(B)	5
	VPGS3786	(C)	5
	VPGS3815	(D)	5
	VPGS3800	(E)	5
	VPGS3789	(F)	5
	VPGS3787	(G)	5
	VPGS3801	(H)	5
122		FAN BAG	
	VQFS3336	(A)	5
	VQFS3327	(B,F)	5
	VQFS3329	(C)	5
	VQFS3334	(D)	5
	VQFS3335	(E,H)	5
	VQFS3366	(G)	5

Ref. No.	Part No.	Part Name	Remarks
123		INFRARED REMOTE CONTROL UNIT	
	VSQS1490	(A,E)	5
	VSQS1488	(B,C,D)	5
	VSQS1480	(F,G)	5
	VSQS1489	(H)	5
124	VJAS0183	VHF CONNECTING CABLE	5
125	VPNS0579	FRONT CUSHION, STYROFOAM	5
126	VPNS0580	REAR CUSHION, STYROFOAM	5
		SCREWS AND WASHERS	
401	VHDS0475	SCREW, STEEL	1
404	VHDS0472	SCREW, FE	4
405	VHDS0496	SCREW W/WASHER, FE	4
407	XYN26+C5	SCREW W/WASHER, STEEL	2
408	XYN2+J5FZ	SCREW W/WASHER, STEEL	2
410	VHDS0498	SCREW W/WASHER, STEEL	1
413	VHDS0293	SCREW, FE	4
414	VHNS0070	MAIN CAM PUSH NUT, STEEL	1
415	VMXS0925	REEL WASHER, PBT	1
416	VMXS0922	CUT WASHER, NYLON	2
417	VMXS0924	CUT WASHER, NYLON	1
424	XYC26+CF6J	SCREW W/WASHER, STEEL	1
425	XTB3+12A	TAPPING SCREW, FE	4
429	VHDS0491	SCREW W/WASHER, STEEL	1
430	XTV26+6FFZJ	TAPPING SCREW, STEEL	2
431	XTV26+6FJ	TAPPING SCREW, STEEL	2
435	XSN26+4	SCREW, STEEL	2
449	VHDS0493	TAPPING SCREW, FE	4
450	VHDS0309	SCREW, FE	4
456	VHDS0497	SCREW W/WASHER, FE	4
458	XTV26+8J	TAPPING SCREW, FE	4
460	XTN4+12A	TAPPING SCREW, FE	4
461	VHDS0460	SCREW, FE	4
462	XTN4+15AR	SCREW, FE	4
		SERVICE FIXTURES AND TOOLS	
	VMFS0003H6	VHS ALIGNMENT TAPE	
	VFKS0009	REEL TABLE HEIGHT FIXTURE	
	VFKS0010	POST ADJUSTMENT PLATE	
	VFKS0081	GREASE	
	VFK0329	POST ADJUSTMENT DRIVER	
	VFK1301	SILICON GREASE	
	VFK27	HEAD CLEANING STICK	
	VFK0330	H-POSITION ADJUSTMENT DRIVER	
	VUZS0002	EXTENSION CABLE KIT	
	VUVS0001	MODE SELECT SW ASS'Y	
	VUVS0002	EXTENSION CABLE -1	
	VUVS0003	EXTENSION CABLE -2	
		(FOR Hi-Fi MODEL)	
	VUVS0004	EXTENSION CABLE -2	
		(FOR 4 HEAD MODEL)	
	VUVS0005	EXTENSION CABLE -2	
		(FOR 2 HEAD MODEL)	

ELECTRICAL REPLACEMENT PARTS LIST

(E1, E4, E6, E7)

Ref. No.	Part No.	Part Name	Remarks
		PRINTED CIRCUIT BOARD ASSEMBLY	
E1	VEPS6026AC	MAIN C.B.A.	■ E.S.D. RTL
	(A)		
E1	VEPS6023GH	MAIN C.B.A.	■ E.S.D. RTL
	(B)		
E1	VEPS6023GJ	MAIN C.B.A.	■ E.S.D. RTL
	(C,D)		
E1	VEPS6026GB	MAIN C.B.A.	■ E.S.D. RTL
	(E)		
E1	VEPS6023HH	MAIN C.B.A.	■ E.S.D. RTL
	(F)		
E1	VEPS6023HJ	MAIN C.B.A.	■ E.S.D. RTL
	(G)		
E1	VEPS6026HB	MAIN C.B.A.	■ E.S.D. RTL
	(H)		
E4	VEPS8022A	OPERATION C.B.A.	■ E.S.D.
	(G)		
E6	VEPS5012A	HEAD AMP C.B.A.	■ E.S.D.
	(A)		
E6	VEPS5011A	HEAD AMP C.B.A.	■ E.S.D.
	(B,C,D,E)		
E6	VEPS5010A	Hi-Fi AUDIO/VIDEO HEAD AMP	■ E.S.D.
		C.B.A.	
	(F,G,H)		
E7	VEPS0A25A	JUNCTION C.B.A.	■ E.S.D.
		MAIN C.B.A.	■
		(A,E,H)	
		INTEGRATED CIRCUITS	
IC1001	PS2501-1-X	IC, LINEAR ERROR V. DET	⚠
	OR ON3131-R.KT	IC, LINEAR ERROR V. DET	⚠
	OR ON3131-S.KT	IC, LINEAR ERROR V. DET	⚠
IC3001	AN3475FBP	IC, LINEAR VIDEO/AUDIO PROCESS	
IC3101	MN3885S	IC, CCD 1H DELAY	E.S.D.
IC3301	LC74723M9629	IC, LOGIC CHARACTER GENERATOR	E.S.D.
IC4201	AN3962FB-V	IC, LINEAR Hi-Fi AUDIO PROCESS	
	(H)		
IC6001	MN675048A5B2	IC, 8BIT MICROPROCESSOR	E.S.D.
IC6002	CNA1801N	REEL SENSOR UNIT	
IC6003	CNA1801N	REEL SENSOR UNIT	
		TRANSISTORS	
Q1001	2SC4533LP.KT		⚠
	OR 2SC5130LF608		⚠
Q1002	2SD2259		
Q1003	2SD601A(R,S)	CHIP	
Q1004	2SB709A(Q,R)	CHIP	
Q1005	2SB709A(Q,R)	CHIP	
Q1051	2SD2159(T)		
	(A,E)		
	2SD2375(P,Q)		
	(H)		
Q1052	2SD601(R,S)	CHIP	
Q3001	2SB709(R,S)	CHIP	
Q4001	2SB709A(Q,R,S)	CHIP	
Q4002	2SD601A(R,S)	CHIP	
Q4003	2SD601A(R,S)	CHIP	
Q4101	2SD601(R,S)	CHIP	
Q4601	2SD601(R,S)	CHIP	
	(H)		
Q6002	2SB709(R,S)	CHIP	
Q6003	2SD601(R,S)	CHIP	
Q6005	2SB709(R,S)	CHIP	
Q6006	2SD601(R,S)	CHIP	
Q6008	2SD601(R,S)	CHIP	
Q6009	VEKS5522	PHOTO SENSOR UNIT	
Q6010	VEKS5522	PHOTO SENSOR UNIT	
Q6301	2SD601(R,S)	CHIP	
Q6302	2SD601(R,S)	CHIP	
Q6303	2SD601(R,S)	CHIP	

Ref. No.	Part No.	Part Name	Remarks
Q6304	2SD601(R,S)	CHIP	
	(H)		
Q6390	2SD601(R,S)	CHIP	
	(H)		
		DIODES	
D1001	S1WBA40		⚠
	OR S1WBA60		⚠
D1002	ERA18-04V3		
D1003	ERA18-04V3		
D1005	ERA18-04V3		
D1006	RU2YXLFC1		
	(A,E)		
	RU3YXLFC1		
	(H)		
D1007	MA188		
	(A,E)		
	ERA18-04V3		
	(H)		
D1008	ERB81-004V1		
D1011	MA4051NH	ZENER 5.1V	
D1012	MA858		
D1013	MA165		
D1015	MA7180A-TR	ZENER 18V	⚠
	OR MA7180B-TR	ZENER 18V	⚠
D1016	MA165		
D1051	MA4100N	ZENER 10V	
D1052	MA165		
D1053	MA165		
D3004	MA4091-M	ZENER 9.1V	
D4201	MA165		
	(H)		
D6001	VEKS5521	SENSOR LED UNIT	
D6002	MA165		
D6003	MA165		
D6007	MA165		
D6201	MA165		
D6202	MA165		
D6203	MA165		
D6204	MA165		
D6301	MA165		
D6302	MA165		
D6303	SLP936C81HAB	LED RED	
D6304	SLP936C81HAB	LED RED	
D6305	SLP336C81HAB	LED GREEN	
D6306	SLP336C81HAB	LED GREEN	
D6330	SLP336C81HAB	LED GREEN	
	(H)		
D6331	SLP936C81HAB	LED RED	
	(H)		
D6332	SLP336C81HAB	LED GREEN	
	(H)		
D7002	MA4300-TA	ZENER 30V	
		RESISTORS	
R1001	VRESC2TK275T	+-10% 1/2W 2.7M	⚠
R1003	VRESE2TJ334	1/2W 330K	
R1004	ERG2SJW333E	METAL OXIDE 2W 33K	
R1005	ERG1SJW560E	METAL OXIDE 1W 56	
R1006	ERJ6GEYJ222V	MGF CHIP 1/10W 2.2K	
R1007	ERDS2TJ101	100	
R1008	ERDS2TJ392	3.9K	
R1010	ERD25FYJ100T	10	⚠
R1011	ERD25FYJ100T	10	⚠
	(A,E)		
	ERD25FYJ4R7T	4.7	⚠
	(H)		
R1014	ERJ6GEYJ221V	MGF CHIP 1/10W 220	
R1015	ERJ6GEYJ221V	MGF CHIP 1/10W 220	
R1016	ERJ6GEYJ562V	MGF CHIP 1/10W 5.6K	
R1017	ERJ6GEYJ103V	MGF CHIP 1/10W 10K	
R1018	ERJ6GEYJ183V	MGF CHIP 1/10W 18K	
R1019	ERJ6GEYJ392V	MGF CHIP 1/10W 3.9K	
R1020	ERJ6GEYJ682V	MGF CHIP 1/10W 6.8K	
R1022	ERJ6GEYJ221V	MGF CHIP 1/10W 220	
R1051	ERJ6GEYJ472V	MGF CHIP 1/10W 4.7K	

Ref. No.	Part No.	Part Name	Remarks
R1052	ERDS2TJ123	12K	
	(A,E)		
	ERDS2TJ153	15K	
	(H)		
R1053	ERDS2TJ153	15K	
	(H)		
R3002	ERJ6GEYJ331V	MGF CHIP 1/10W 330	
R3003	ERJ6GEYJ561V	MGF CHIP 1/10W 560	
R3004	ERJ6GEYJ750V	MGF CHIP 1/10W 75	
R3005	ERDS2TJ101	100	
R3021	ERJ6GEYJ332V	MGF CHIP 1/10W 3.3K	
R3022	ERJ6GEYJ152V	MGF CHIP 1/10W 1.5K	
R3023	ERJ6GEYJ121V	MGF CHIP 1/10W 120	
R3027	ERJ6GEYJ821V	MGF CHIP 1/10W 820	
R3029	ERJ6GEYJ125V	MGF CHIP 1/10W 1.2M	
R3030	ERJ6GEYJ103V	MGF CHIP 1/10W 10K	
R3031	ERJ6GEYJ474V	MGF CHIP 1/10W 470K	
R3033	ERJ6GEYJ222V	MGF CHIP 1/10W 2.2K	
R3034	ERJ6GEYJ121V	MGF CHIP 1/10W 120	
R3035	ERJ6GEYJ103V	MGF CHIP 1/10W 10K	
R3036	ERJ6GEYJ122V	MGF CHIP 1/10W 1.2K	
R3041	ERJ6GEYJ750V	MGF CHIP 1/10W 75	
R3301	ERJ6GEYJ222V	MGF CHIP 1/10W 2.2K	
R3302	ERJ6GEYJ222V	MGF CHIP 1/10W 2.2K	
R3303	ERJ6GEYJ473V	MGF CHIP 1/10W 47K	
R4001	ERJ6GEYJ103V	MGF CHIP 1/10W 10K	
R4002	ERJ6GEYJ334V	MGF CHIP 1/10W 330K	
R4003	ERJ6GEYJ221V	MGF CHIP 1/10W 220	
R4004	ERJ6GEYJ333V	MGF CHIP 1/10W 33K	
R4005	ERJ6GEYJ225V	MGF CHIP 1/10W 2.2M	
R4006	ERJ6GEYJ681V	MGF CHIP 1/10W 680	
R4007	ERJ6GEYJ821V	MGF CHIP 1/10W 820	
R4008	ERJ6GEYG223V	MGF CHIP +-2% 1/10W 22K	
R4009	ERJ6GEYJ473V	MGF CHIP 1/10W 47K	
	(A,E)		
R4010	ERJ6GEYJ473V	MGF CHIP 1/10W 47K	
	(A,E)		
	ERJ6GEYJ123V	MGF CHIP 1/10W 12K	
	(H)		
R4011	ERJ6GEYJ562V	MGF CHIP 1/10W 5.6K	
	(A,E)		
	ERJ6GEYJ682V	MGF CHIP 1/10W 6.8K	
	(H)		
R4012	ERJ6GEYJ682V	MGF CHIP 1/10W 6.8K	
R4013	ERJ6GEY0R00V	MGF CHIP 1/10W 0	●
	(A,E)		
R4014	ERJ6GEYJ472V	MGF CHIP 1/10W 4.7K	
R4015	ERJ6GEYJ222V	MGF CHIP 1/10W 2.2K	
R4017	ERJ6GEYJ561V	MGF CHIP 1/10W 560	
R4018	ERJ6GEYJ562V	MGF CHIP 1/10W 5.6K	
	(A,E)		
R4019	VCYSARH102KB	CERAMIC 50V 1000P	
R4028	ERJ6GEYJ222V	MGF CHIP 1/10W 2.2K	
R4101	ERJ6GEYJ224V	MGF CHIP 1/10W 220K	
R4102	ERJ6GEYG333V	MGF CHIP +-2% 1/10W 33K	
R4103	ERJ6GEYJ153V	MGF CHIP 1/10W 15K	
R4201	ERJ6GEYJ472V	MGF CHIP 1/10W 4.7K	
	(H)		
R4202	ERJ6GEYJ472V	MGF CHIP 1/10W 4.7K	
	(H)		
R4203	ERJ6GEYJ511V	MGF CHIP 1/10W 510	
	(H)		
R4204	ERJ6GEYJ511V	MGF CHIP 1/10W 510	
	(H)		
R4205	ERJ6GEYG333V	MGF CHIP +-2% 1/10W 33K	
	(H)		
R4206	ERJ6GEYG333V	MGF CHIP +-2% 1/10W 33K	
	(H)		
R4207	ERJ6GEYG153V	MGF CHIP +-2% 1/10W 15K	
	(H)		
R4208	ERJ6GEYG153V	MGF CHIP +-2% 1/10W 15K	
	(H)		
R4213	ERJ6GEYJ333V	MGF CHIP 1/10W 33K	
	(H)		
R4214	ERJ6GEYJ333V	MGF CHIP 1/10W 33K	
	(H)		
R4215	ERJ6GEYJ153V	MGF CHIP 1/10W 15K	
	(H)		

Ref. No.	Part No.	Part Name	Remarks
R4216	ERJ6GEYJ153V	MGF CHIP 1/10W 15K	
	(H)		
R4217	ERJ6GEYJ102V	MGF CHIP 1/10W 1K	
	(H)		
R4218	ERJ6GEYJ102V	MGF CHIP 1/10W 1K	
	(H)		
R4219	ERJ6GEYJ683V	MGF CHIP 1/10W 68K	
	(H)		
R4220	ERJ6GEYJ103V	MGF CHIP 1/10W 10K	
	(H)		
R4221	ERJ6GEYJ101V	MGF CHIP 1/10W 100	
	(H)		
R4222	ERJ6GEYJ101V	MGF CHIP 1/10W 100	
	(H)		
R4226	ERJ6GEY0R00V	MGF CHIP 1/10W 0	●
	(H)		
R4230	ERJ6GEY0R00V	MGF CHIP 1/10W 0	●
	(H)		
R4234	ERJ6GEY0R00V	MGF CHIP 1/10W 0	●
	(H)		
R4240	ERJ6GEY0R00V	MGF CHIP 1/10W 0	●
	(H)		
R4241	ERA6YEB153V	MGF CHIP +-0.1% 1/10W 15K	
	(H)		
R4243	ERDS2TJ152	1.5K	
	(H)		
R4244	ERJ6GEYJ152V	MGF CHIP 1/10W 1.5K	
	(H)		
R4245	ERJ6GEY0R00V	MGF CHIP 1/10W 0	●
	(H)		
R4246	ERJ6GEYJ333V	MGF CHIP 1/10W 33K	
	(H)		
R4247	ERJ6GEYJ123V	MGF CHIP 1/10W 12K	
	(H)		
R4248	ERJ6GEY0R00V	MGF CHIP 1/10W 0	●
	(H)		
R4249	ERJ6GEYJ102V	MGF CHIP 1/10W 1K	
	(H)		
R4601	ERJ6GEYJ123V	MGF CHIP 1/10W 12K	
	(H)		
R4602	ERJ6GEYJ472V	MGF CHIP 1/10W 4.7K	
	(A,E)		
	ERJ6GEYJ103V	MGF CHIP 1/10W 10K	
	(H)		
R4604	ERJ6GEYJ561V	MGF CHIP 1/10W 560	
	(H)		
R4605	ERJ6GEYJ562V	MGF CHIP 1/10W 5.6K	
	(H)		
R4606	ERJ6GEYJ682V	MGF CHIP 1/10W 6.8K	
	(H)		
R4607	ERJ6GEYJ101V	MGF CHIP 1/10W 100	
	(H)		
R4608	ERJ6GEYJ102V	MGF CHIP 1/10W 1K	
	(A,E)		
R4870	ERJ6GEYJ223V	MGF CHIP 22K	
R6001	ERDS2TJ561	560	
R6002	ERDS2TJ561	560	
R6004	ERJ6GEYJ333V	MGF CHIP 1/10W 33K	
	(H)		
R6005	ERJ6GEYJ223V	MGF CHIP 1/10W 22K	
	(H)		
R6006	ERJ6GEYJ103V	MGF CHIP 1/10W 10K	
R6012	ERJ6GEYJ103V	MGF CHIP 1/10W 10K	
R6013	ERJ6GEYJ103V	MGF CHIP 1/10W 10K	
	(H)		
R6014	ERJ6GEYJ103V	MGF CHIP 1/10W 10K	
R6015	ERJ6GEYJ562V	MGF CHIP 1/10W 5.6K	
R6019	ERJ6GEYJ223V	MGF CHIP 1/10W 22K	
R6020	ERJ6GEYJ223V	MGF CHIP 1/10W 22K	
R6021	ERJ6GEYJ102V	MGF CHIP 1/10W 1K	
R6022	ERJ6GEYJ223V	MGF CHIP 1/10W 22K	
R6023	ERJ6GEYJ563V	MGF CHIP 1/10W 56K	
R6024	ERJ6GEYJ563V	MGF CHIP 1/10W 56K	
R6025	ERJ6GEYJ101V	MGF CHIP 1/10W 100	
R6026	ERJ6GEYJ101V	MGF CHIP 1/10W 100	
R6029	ERJ6GEYJ103V	MGF CHIP 1/10W 10K	
R6030	ERJ6GEYJ103V	MGF CHIP 1/10W 10K	
R6033	ERDS2TJ681	680	

Ref. No.	Part No.	Part Name	Remarks
R6034	ERJ6GEYJ472V	MGF CHIP 1/10W 4.7K	
R6035	ERJ6GEYJ103V	MGF CHIP 1/10W 10K	
R6037	ERDS2TJ391	390	
R6038	ERDS2TJ560	56	
R6051	ERJ6GEYJ103V	MGF CHIP 1/10W 10K	
R6052	ERJ6GEYJ103V	MGF CHIP 1/10W 10K	
R6053	ERJ6GEYJ103V	MGF CHIP 1/10W 10K	
R6056	ERJ6GEYJ103V	MGF CHIP 1/10W 10K	
R6057	ERJ6GEYJ103V	MGF CHIP 1/10W 10K	
R6058	ERJ6GEYJ103V	MGF CHIP 1/10W 10K	
R6059	ERJ6GEYJ182V	MGF CHIP 1/10W 1.8K	
R6060	ERJ6GEYJ475V	MGF CHIP 1/10W 4.7M	
R6061	ERJ6GEYJ102V	MGF CHIP 1/10W 1K	
R6062	ERJ6GEYJ224V	MGF CHIP 1/10W 220K	
	(E,H)		
R6063	ERJ6GEYJ153V	MGF CHIP 1/10W 15K	
	(E,H)		
R6064	ERJ6GEYJ153V	MGF CHIP 1/10W 15K	
	(E,H)		
R6066	ERJ6GEYJ473V	MGF CHIP 1/10W 47K	
R6068	ERJ6GEYJ103V	MGF CHIP 1/10W 10K	
R6069	ERJ6GEYJ104V	MGF CHIP 1/10W 100K	
R6070	ERJ6GEYJ104V	MGF CHIP 1/10W 100K	
R6073	ERJ6GEYJ473V	MGF CHIP 1/10W 47K	
R6074	ERDS2TJ272	2.7K	
R6075	ERJ6GEYJ223V	MGF CHIP 1/10W 22K	
R6077	ERJ6GEYJ103V	MGF CHIP 1/10W 10K	
R6078	ERJ6GEYJ103V	MGF CHIP 1/10W 10K	
R6085	ERJ6GEYJ223V	MGF CHIP 1/10W 22K	
R6086	ERJ6GEYJ223V	MGF CHIP 1/10W 22K	
R6087	ERJ6GEYJ223V	MGF CHIP 1/10W 22K	
R6088	ERJ6GEYJ102V	MGF CHIP 1/10W 1K	
R6093	ERJ6GEYJ103V	MGF CHIP 1/10W 10K	
	(H)		
R6094	ERJ6GEYJ103V	MGF CHIP 1/10W 10K	
R6099	ERJ6GEYJ103V	MGF CHIP 1/10W 10K	
R6102	ERJ6GEYJ102V	MGF CHIP 1/10W 1K	
R6104	ERJ6GEYJ103V	MGF CHIP 1/10W 10K	
R6108	ERDS2TJ103	10K	
R6109	ERJ6GEYJ103V	MGF CHIP 1/10W 10K	
R6110	ERJ6GEYJ103V	MGF CHIP 1/10W 10K	
R6201	EVNCYAA03B15	VARIABLE 100K	
	(A,E)		
	EVMF6SA00B15	VARIABLE 100K	
	(H)		
R6202	ERJ6GEYJ104V	MGF CHIP 1/10W 100K	
R6203	ERJ6GEYJ333V	MGF CHIP 1/10W 33K	
R6204	ERJ6GEYJ102V	MGF CHIP 1/10W 1K	
R6205	ERJ6GEYJ243V	MGF CHIP 1/10W 24K	
R6206	ERJ6GEYJ333V	MGF CHIP 1/10W 33K	
R6207	ERJ6GEYJ223V	MGF CHIP 1/10W 22K	
R6208	ERJ6GEYJ823V	MGF CHIP 1/10W 82K	
R6209	ERJ6GEYJ224V	MGF CHIP 1/10W 220K	
	(A,E)		
	ERJ6GEYJ184V	MGF CHIP 1/10W 180K	
	(H)		
R6210	ERJ6GEYJ475V	MGF CHIP 1/10W 4.7M	
	(E,H)		
R6211	ERJ6GEYJ221V	MGF CHIP 1/10W 220	
R6212	ERJ6GEYJ332V	MGF CHIP 1/10W 3.3K	
R6213	ERJ6GEYJ473V	MGF CHIP 1/10W 47K	
R6214	ERJ6GEYJ394V	MGF CHIP 1/10W 390K	
R6215	ERJ6GEYJ154V	MGF CHIP 1/10W 150K	
R6216	ERJ6GEYJ222V	MGF CHIP 1/10W 2.2K	
R6218	ERJ6GEYJ184V	MGF CHIP 1/10W 180K	
	(A,E)		
	ERJ6GEYJ154V	MGF CHIP 1/10W 150K	
	(H)		
R6219	ERJ6GEYJ274V	MGF CHIP 1/10W 270K	
R6221	ERJ6GEYJ221V	MGF CHIP 1/10W 220	
R6222	ERJ6GEYJ154V	MGF CHIP 1/10W 150K	
R6223	ERJ6GEYJ392V	MGF CHIP 1/10W 3.9K	
R6224	ERJ6GEYJ472V	MGF CHIP 1/10W 4.7K	
R6230	ERJ6GEYJ222V	MGF CHIP 1/10W 2.2K	
R6301	ERDS2TJ104	100K	
R6302	ERDS2TJ104	100K	
R6303	ERDS2TJ104	100K	
R6304	ERDS2TJ104	100K	

Ref. No.	Part No.	Part Name	Remarks
R6305	ERDS2TJ104	100K	
R6306	ERDS2TJ102	1K	
R6307	ERDS2TJ102	1K	
R6308	ERDS2TJ151	150	
R6309	ERDS2TJ151	150	
R6310	ERDS2TJ151	150	
R6311	ERDS2TJ151	150	
	(H)		
R6313	ERDS2TJ151	150	
	(H)		
R6314	ERDS2TJ151	150	
	(H)		
R6315	ERDS2TJ470	47	
R6390	ERDS2TJ562	5.6K	
	(H)		
R7001	ERJ6GEYJ473V	MGF CHIP 1/10W 47K	
	(A,E)		
R7002	ERJ6GEYJ271V	MGF CHIP 1/10W 270	
R7003	ERDS2TJ102	1K	
R7004	ERJ6GEYJ102V	MGF CHIP 1/10W 1K	
R7006	ERJ6GEYJ102V	MGF CHIP 1/10W 1K	
R7007	EVNCYAA03B24	VARIABLE 20K	
	(H)		
		CAPACITORS	
C1001	ECKRRS103ZVD	CERAMIC +80%-20% 125V 0.01	⚠
	OR VCKSTQG103ZY	CERAMIC +80%-20% 125V 0.01	⚠
	OR VCKSUQD103MY	CERAMIC +-20% 125V 0.01	⚠
C1002	ECKRRS332ME8	CERAMIC +-20% 125V 3300P	⚠
	OR VCKSTQG332MX	CERAMIC +-20% 125V 3300P	⚠
	OR VCKSUQD332MX	CERAMIC +-20% 125V 3300P	⚠
C1003	ECKRNB332ME8	CERAMIC +-20% 125V 3300P	⚠
	OR VCKSTQG332MX	CERAMIC +-20% 125V 3300P	⚠
	OR VCKSUQD332MX	CERAMIC +-20% 125V 3300P	⚠
C1004	ECEA2DU820YB	ELECTROLYTIC 200V 82	⚠
	OR VCESR2D820XB	ELECTROLYTIC 200V 82	⚠
	(A,E)		
	ECEA2DU121YB	ELECTROLYTIC 200V 120	⚠
	(H)		
C1005	ECA2DHG4R7B	ELECTROTIC 200V 4.7	
C1006	ECKW2H221KB5	CERAMIC 500V 220P	
C1007	VCYSBRC104MX	CERAMIC +-20% 16V 0.1	
C1009	ECQB1H103JF	POLYESTER +-5% 50V 0.01	
C1010	ECUV1H101JCM	C CHIP +-5% 50V 100P	
C1011	ECA1HM4R7B	ELECTROLYTIC 50V 4.7	AKEI
	(A,E)		
	ECEA1HGE4R7	ELECTROLYTIC 50V 4.7	
	(H)		
C1012	ECEA1PEE331	ELECTROLYTIC 18V 330	
C1013	ECEA1PEE331	ELECTROLYTIC 18V 330	
C1014	ECEA1HGE4R7	ELECTROLYTIC 50V 4.7	
	(A,E)		
	ECEA1HGE470	ELECTROLYTIC 50V 47	
	(H)		
C1016	ECEA1PEE331	ELECTROLYTIC 18V 330	
C1017	ECA0JM102B	ELECTROLYTIC 6.3V 1000	
	(A,E)		
	ECA0JFE102XB	ELECTROLYTIC 6.3V 1000	
	(H)		
C1018	ECQB1H104P9	POLYESTER +100%-0% 50V 0.1	
C1021	ECEA1HKG010	ELECTROLYTIC 50V 1	
C1023	ECKW1H103ZF5	CERAMIC +80%-20% 50V 0.01	
C1025	ECKRRS101MBY	CERAMIC +-20% 125V 100P	⚠
	OR VCKSTNG101KW	CERAMIC 125V 100P	⚠
	OR VCKSUND101KW	CERAMIC 125V 100P	⚠
C1027	ECKRRS103ZVD	CERAMIC +80%-20% 125V 0.01	⚠
	OR VCKSTQG103ZY	CERAMIC +80%-20% 125V 0.01	⚠
	OR VCKSUQD103MY	CERAMIC +-20% 125V 0.01	⚠
C1028	ECEA1PEE331	ELECTROLYTIC 18V 330	
C1029	ECUV1H101JCM	C CHIP +-5% 50V 100P	
C1030	VCYSBRE183KX	CERAMIC 25V 0.018	
C1032	ECEA0JKA470	ELECTROLYTIC 6.3V 47	
C1051	ECEA1HKAR47	ELECTROLYTIC 50V 0.47	
C1052	ECEA1CKA100	ELECTROLYTIC 16V 10	
C3001	ECA0JM471	ELECTROLYTIC 6.3V 470	
C3002	ECUV1E104ZFN	C CHIP +80%-20% 25V 0.1	
C3011	ECUV1H103KBN	C CHIP 50V 0.01	

Ref. No.	Part No.	Part Name	Remarks
C3014	ECUV1E104ZFN	C CHIP +80%-20% 25V 0.1	
C3015	ECUV1E104ZFN	C CHIP +80%-20% 25V 0.1	
C3017	ECEA1EKA4R7	ELECTROLYTIC 25V 4.7	
C3018	ECUV1H181JCN	C CHIP +-5% 50V 180P	
C3019	ECUV1H560JCN	C CHIP +-5% 50V 56P	
C3021	ECUV1C224ZFN	C CHIP +80%-20% 16V 0.22	
C3022	ECUV1E104ZFN	C CHIP +80%-20% 25V 0.1	
C3023	ECEA0JKA221	ELECTROLYTIC 6.3V 220	
C3024	ECEA0JKA470	ELECTROLYTIC 6.3V 47	
C3025	ECUV1H103ZFN	C CHIP +80%-20% 50V 0.01	
C3026	ECUV1E104ZFN	C CHIP +80%-20% 25V 0.1	
C3027	ECUV1C224ZFN	C CHIP +80%-20% 16V 0.22	
C3028	ECEA1CKA100	ELECTROLYTIC 16V 10	
C3029	ECUV1E104ZFN	C CHIP +80%-20% 25V 0.1	
C3030	ECEA0JKA221	ELECTROLYTIC 6.3V 220	
C3031	ECEA1HKA2R2	ELECTROLYTIC 50V 2.2	
C3032	ECEA1HKA2R2	ELECTROLYTIC 50V 2.2	
C3033	ECEA0JKA470	ELECTROLYTIC 6.3V 47	
C3034	ECEA1HKAR22	ELECTROLYTIC 50V 0.22	
C3035	ECUV1H560JCN	C CHIP +-5% 50V 56P	
C3036	ECUV1E104ZFN	C CHIP +80%-20% 25V 0.1	
C3037	ECEA0JKA220	ELECTROLYTIC 6.3V 22	
C3039	ECUV1H822KBN	C CHIP 50V 8200P	
C3043	ECUV1H103ZFN	C CHIP +80%-20% 50V 0.01	
C3044	ECUV1C474ZFN	C CHIP +80%-20% 16V 0.47	
C3045	ECUV1C474ZFN	C CHIP +80%-20% 16V 0.47	
C3047	ECUV1H181JCN	C CHIP +-5% 50V 180P	
C3048	ECUV1H390JCN	C CHIP +-5% 50V 39P	
C3049	ECUV1E104ZFN	C CHIP +80%-20% 25V 0.1	
C3050	ECUV1E104ZFN	C CHIP +80%-20% 25V 0.1	
C3051	ECEA0JKA221	ELECTROLYTIC 6.3V 220	
C3052	ECUV1H103ZFN	C CHIP +80%-20% 50V 0.01	
C3053	ECEA1HKAR47	ELECTROLYTIC 50V 0.47	
C3054	ECEA1HKA2R2	ELECTROLYTIC 50V 2.2	
C3055	ECUV1H392KBN	C CHIP 50V 3900P	
C3056	ECEA1HKAR010	ELECTROLYTIC 50V 1	
C3057	ECUV1E104ZFN	C CHIP +80%-20% 25V 0.1	
C3058	ECEA0JKA221	ELECTROLYTIC 6.3V 220	
C3062	ECUV1E104ZFN	C CHIP +80%-20% 25V 0.1	
C3101	ECEA1HKA010	ELECTROLYTIC 50V 1	
C3102	ECUV1E104ZFN	C CHIP +80%-20% 25V 0.1	
C3104	ECUV1H103ZFN	C CHIP +80%-20% 50V 0.01	
C3105	ECUV1H103ZFN	C CHIP +80%-20% 50V 0.01	
C3106	ECUV1H103ZFN	C CHIP +80%-20% 50V 0.01	
C3108	ECUV1H102KBN	C CHIP 50V 1000P	
C3109	ECEA0JKA221	ELECTROLYTIC 6.3V 220	
C3301	ECUV1E104ZFN	C CHIP +80%-20% 25V 0.1	
C3302	ECUV1H103ZFN	C CHIP +80%-20% 50V 0.01	
C3304	ECUV1H103ZFN	C CHIP +80%-20% 50V 0.01	
C3305	ECUV1H181JCN	C CHIP +-5% 50V 180P	
C3306	ECEA1HKA010	ELECTROLYTIC 50V 1	
C3307	ECUV1H180GCN	C CHIP 50V 18P	
C3308	ECUV1H220JCN	C CHIP +-5% 50V 22P	
C3310	ECUV1H103ZFN	C CHIP +80%-20% 50V 0.01	
C3311	ECEA0JKA470	ELECTROLYTIC 6.3V 47	
C3312	ECUV1H150JCN	C CHIP +-5% 50V 15P	
C4001	ECUV1E104KBN	C CHIP 25V 0.1	
C4002	ECEA1HKA010	ELECTROLYTIC 50V 1	
C4003	ECUV1H392KBN	C CHIP 50V 3900P	
C4004	ECUV1H103KBN	C CHIP 50V 0.01	
C4005	ECEA0JKA220	ELECTROLYTIC 6.3V 22	
C4006	ECUV1H102KBN	C CHIP 50V 1000P	
C4007	ECEA0JKA220	ELECTROLYTIC 6.3V 22	
C4008	ECEA0JKA470	ELECTROLYTIC 6.3V 47	
C4009	ECEA1CKA100	ELECTROLYTIC 16V 10	
C4010	ECUV1E273KBN	C CHIP 25V 0.027	
C4011	ECUV1H822KBN	C CHIP 50V 8200P	
C4012	ECEA1HKA010	ELECTROLYTIC 50V 1	
C4014	ECEA1HKA010	ELECTROLYTIC 50V 1	
C4015	ECUV1E104ZFN	C CHIP +80%-20% 25V 0.1	
C4017	ECUV1H103KBN	C CHIP 50V 0.01	
	(H)		
C4018	ECEA1HKA010	ELECTROLYTIC 50V 1	
	(A,E)		
C4101	ECUV1H221JCN	C CHIP +-5% 50V 220P	
C4102	ECHS1562JZ3	POLYESTER +-5% 100V 5600P	
C4103	ECUV1H103KBN	C CHIP 50V 0.01	
C4104	ECUV1H103KBN	C CHIP 50V 0.01	

Ref. No.	Part No.	Part Name				Remarks
C4106	ECEA1CKA220	ELECTROLYTIC		16V	22	
C4201	ECUV1E473KBN	C CHIP		25V	0.047	
	(H)					
C4202	ECUV1E473KBN	C CHIP		25V	0.047	
	(H)					
C4203	ECEA0JKA330	ELECTROLYTIC		6.3V	33	
	(H)					
C4204	ECEA0JKA330	ELECTROLYTIC		6.3V	33	
	(H)					
C4205	ECEA1HKA2R2	ELECTROLYTIC		50V	2.2	
	(H)					
C4206	ECEA1HKA2R2	ELECTROLYTIC		50V	2.2	
	(H)					
C4207	ECEA0JKA101	ELECTROLYTIC		6.3V	100	
	(H)					
C4208	ECEA0JKA101	ELECTROLYTIC		6.3V	100	
	(H)					
C4209	ECUV1H153KBN	C CHIP		50V	0.015	
	(H)					
C4210	ECUV1H153KBN	C CHIP		50V	0.015	
	(H)					
C4211	ECUV1H103KBN	C CHIP		50V	0.01	
	(H)					
C4212	ECUV1H103KBN	C CHIP		50V	0.01	
	(H)					
C4213	ECEA1HKA010	ELECTROLYTIC		50V	1	
	(H)					
C4214	ECEA1HKA010	ELECTROLYTIC		50V	1	
	(H)					
C4217	ECEA1HKA010	ELECTROLYTIC		50V	1	
	(H)					
C4218	ECEA1HKA010	ELECTROLYTIC		50V	1	
	(H)					
C4219	ECEA1CKA100	ELECTROLYTIC		16V	10	
	(H)					
C4220	ECEA1CKA100	ELECTROLYTIC		16V	10	
	(H)					
C4221	ECEA1CKA100	ELECTROLYTIC		16V	10	
	(H)					
C4222	ECEA1CKA100	ELECTROLYTIC		16V	10	
	(H)					
C4235	ECEA0JKA101	ELECTROLYTIC		6.3V	100	
	(H)					
C4236	ECEA0JKA470	ELECTROLYTIC		6.3V	47	
	(H)					
C4237	ECEA1CKA100	ELECTROLYTIC		16V	10	
	(H)					
C4238	ECEA1CKA100	ELECTROLYTIC		16V	10	
	(H)					
C4239	ECEA1HKA010	ELECTROLYTIC		50V	1	
	(H)					
C4240	ECUV1C224ZFN	C CHIP	+80%-20%	16V	0.22	
	(H)					
C4242	ECUV1H103ZFN	C CHIP	+80%-20%	50V	0.01	
	(H)					
C4244	ERJ6GEY0R00V	MGF CHIP		1/10W	0	●
	(H)					
C4601	ECEA1CKA100	ELECTROLYTIC		16V	10	
	(H)					
C4603	ECEA1CKA100	ELECTROLYTIC		16V	10	
C4606	ECEA1CKA100	ELECTROLYTIC		16V	10	
	(H)					
C6002	ECUV1E104ZFN	C CHIP	+80%-20%	25V	0.1	
C6004	ECUV1H101JCN	C CHIP	+-5%	50V	100P	
C6005	ECUV1H150GCN	C CHIP	+-2%	50V	15P	
C6006	ECUV1H120JCN	C CHIP	+-5%	50V	12P	
C6007	ECUV1H101JCN	C CHIP	+-5%	50V	100P	
C6008	ECUV1E104ZFN	C CHIP	+80%-20%	25V	0.1	
C6009	ECUV1H101JCN	C CHIP	+-5%	50V	100P	
C6010	ECUV1H101JCN	C CHIP	+-5%	50V	100P	
C6016	ECEA0JU471	ELECTROLYTIC		6.3V	470	
C6019	ECEA0JKA101	ELECTROLYTIC		6.3V	100	
C6201	ECEA0JKA470	ELECTROLYTIC		6.3V	47	
C6202	ECEA0JKA330	ELECTROLYTIC		6.3V	33	
C6203	ECUV1H103KBN	C CHIP		50V	0.01	
C6204	ECUV1H103KBN	C CHIP		50V	0.01	
C6205	ECUV1H102KBN	C CHIP		50V	1000P	
C6206	ECUV1H103KBN	C CHIP		50V	0.01	

Ref. No.	Part No.	Part Name				Remarks
C6207	ECQB1H393KF	POLYESTER		50V	0.039	
C6208	ECEA1HKA010	ELECTROLYTIC		50V	1	
C6209	ECEA1CKA100	ELECTROLYTIC		16V	10	
C6211	ECUV1H272KBN	C CHIP		50V	2700P	
C6212	ECUV1E104KBN	C CHIP		25V	0.1	
C6213	ECUV1H151KN	C CHIP		50V	150P	
C6214	ECUV1H102KBN	C CHIP		50V	1000P	
C6217	ECUV1E104ZFN	C CHIP	+80%-20%	25V	0.1	
C6218	ECEA1CKA100	ELECTROLYTIC		16V	10	
C6221	ECEA0JKA220	ELECTROLYTIC		6.3V	22	
C6222	ECUV1H272KBN	C CHIP		50V	2700P	
C6223	ECUV1E333KBN	C CHIP		25V	0.033	
C6224	ECEA0JKA101	ELECTROLYTIC		6.3V	100	
C6228	ECUV1E104ZFN	C CHIP	+80%-20%	25V	0.1	
C6301	ECEA0JKA470	ELECTROLYTIC		6.3V	47	
C6390	ECEA1CKA470	ELECTROLYTIC		16V	47	
	(H)					
C7001	ECEA0JKA221	ELECTROLYTIC		6.3V	220	
C7003	ECU1H103ZFN	C CHIP	+80%-20%	50V	0.01	
C7005	ECUV1E183KBN	C CHIP		25V	0.018	
	(A,E)					
C7006	ECUV1H103ZFN	C CHIP	+80%-20%	50V	0.01	
C7008	ECEA1CKA101	ELECTROLYTIC		16V	100	
C7010	ECUV1H102KBN	C CHIP		50V	1000P	
C7015	ECUV1C105ZFN	C CHIP	+80%-20%	16V	1	
C7018	ECUV1H103ZFN	C CHIP	+80%-20%	50V	0.01	
C7019	ECUV1H103ZFN	C CHIP	+80%-20%	50V	0.01	
C7020	ECUV1H103ZFN	C CHIP	+80%-20%	50V	0.01	
C7022	ECUV1H330JCN	C CHIP	+-5%	50V	33P	
C7023	ECUV1H330JCN	C CHIP	+-5%	50V	33P	
C7024	ECUV1H103KBN	C CHIP		50V	0.01	
		COILS				
L1001	ELF15N005AB	HIGH PASS FILTER		0.5A	18M	⚠
	OR VLQS0166	HIGH PASS FILTER		0.5A	18M	⚠
	OR VLQS0167	HIGH PASS FILTER		0.5A	18M	⚠
L1002	VLQSAB7D220K				22	
L1003	VLQSAB7D100K				10	
L1006	VLPS0083					
L3014	VLQSH02R470K				47	
L3016	ELESN330KA				33	
L3018	ELESN470KA				47	
L3101	ELESN101KA				100	
L3302	VLQSH02R180J		+-5%		18	
L4001	ELELN153KA				15M	
L4101	ELESN471KA				470	
L7001	ELESN120KA				12	
L7002	ELESN101KA				100	
L7004	VLPS0092	CHIP				
		CRYSTAL OSCILLATOR				
X3010	VSXS0195					
X6001	VSXS0191					
		PIN HEADERS				
P1001	VJPS1154	CONNECTOR 2P				
P3001	VJPS0882	CONNECTOR 12P				
	(A)					
	VJPS0884	CONNECTOR 15P				
	(E)					
	VJPS0885	CONNECTOR 20P				
	(H)					
P4001	VJSS0888	FE CONNECTOR 2P				
P6002	VJPS0881	CONNECTOR 8P				
P6201	VJPS0883	CONNECTOR 14P				
		SWITCHES				
SW6001	VSHS0058	LEAF SWITCH-SAFETY TAB				
SW6002	VSSS0159	MODE SELECT SWITCH				
SW6301	EVQ21309K	PUSH SWITCH				
SW6303	EVQ21309K	PUSH SWITCH				
SW6305	EVQ21309K	PUSH SWITCH				
SW6306	EVQ21309K	PUSH SWITCH				
SW6310	EVQ21309K	PUSH SWITCH				

(E21, E23, E24, E26)

Ref. No.	Part No.	Part Name	Remarks
SW6311	EVQ21309K	PUSH SWITCH	
SW6312	EVQ21309K	PUSH SWITCH	
SW6313	EVQ21309K	PUSH SWITCH	
SW6315	EVQ21309K	PUSH SWITCH	
SW7001	VSSS0152	SELECT SWITCH	
		FUSE & PROTECTOR	
F1001	VSFS0003A16	FUSE 125V 1.6A	⚠
	OR VSFS0028A16	FUSE 125V 1.6A	⚠
	OR VSFS0030B16	FUSE 125V 1.6A	⚠
	OR XBA1C16NU100	FUSE 125V 1.6A	⚠
PR1001	ICP-N38-TP1	IC PROTECTOR 1.5A	⚠
	OR UNH000600A	IC PROTECTOR 1.5A	⚠
PR1002	ICP-N38-TP1	IC PROTECTOR 1.5A	⚠
	OR UNH000600A	IC PROTECTOR 1.5A	⚠
		TRANSFORMER	
T1001	ETS28AD1F5NP		⚠
	OR VTPS0034-1		⚠
	OR VTPS0038-1		⚠
	OR VTPS0040-1		⚠
T4101	EIQ7QF018Q		
		MISCELLANEOUS	
JK3001	VJHS0720	A/V JACK SOCKET	
	(A,E)		
	VJHS0727	A/V JACK SOCKET	
	(H)		
E21	VEQS0602A	TUNER,UHF/VHF NR	
	(A,E)		
E21	VEQS0603	TUNER,UHF/VHF NR	
	(H)		
E23	VJSS0896	FUSE HOLDER	
E24	VEKS5526	LED HOLDER UNIT	
E26	VCRS0213	MTS/SAP HIC	
	(H)		
		MAIN C.B.A.	■
		(B,C,D,F,G)	
		INTEGRATED CIRCUITS	
IC1001	PS2501-1-X	IC, LINEAR ERROR V. DET	⚠
	OR ON3131-R.KT	IC, LINEAR ERROR V. DET	⚠
	OR ON3131-S.KT	IC, LINEAR ERROR V. DET	⚠
IC3001	AN3475FBP	IC, LINEAR VIDEO/AUDIO PROCESS	
IC3101	MN3885S	IC, CCD 1H DELAY	E.S.D.
IC3301	LC74723M9629	IC, LOGIC CHARACTER GENERATOR	E.S.D.
IC4201	AN3962FB-V	IC, LINEAR Hi-Fi AUDIO PROCESS	
	(F,G)		
IC6001	MN675048A5A3	IC, 8BIT MICROPROCESSOR	E.S.D.
IC6002	CNA1801N	REEL SENSOR UNIT	
IC6003	CNA1801N	REEL SENSOR UNIT	
IC6301	T47C216FF917	IC, 4BIT MICROCONTROLLER	E.S.D.
		TRANSISTORS	
Q1001	2SC4533LP.KT		⚠
	OR 2SC5130LF608		⚠
Q1002	2SD2259		
Q1003	2SD601A(R,S)	CHIP	
Q1004	2SB709A(Q,R)	CHIP	
Q1005	2SB709A(Q,R)	CHIP	
Q1051	2SD2159(T)		
	(B,C,D)		
	2SD2375(P,Q)		
	(F,G)		
Q1052	2SD601(R,S)	CHIP	
Q3001	2SB709(R,S)	CHIP	
Q4001	2SB709A(Q,R,S)	CHIP	
Q4002	2SD601A(R,S)	CHIP	

Ref. No.	Part No.	Part Name	Remarks
Q4003	2SD601A(R,S)	CHIP	
Q4101	2SD601(R,S)	CHIP	
Q4601	2SD601(R,S)	CHIP	
	(F,G)		
Q6002	2SB709(R,S)	CHIP	
Q6003	2SD601(R,S)	CHIP	
Q6005	2SB709(R,S)	CHIP	
Q6006	2SD601(R,S)	CHIP	
Q6008	2SD601(R,S)	CHIP	
Q6009	VEKS5522	PHOTO SENSOR UNIT	
Q6010	VEKS5522	PHOTO SENSOR UNIT	
		DIODES	
D1001	S1WBA40		⚠
	OR S1WBA60		⚠
D1002	ERA18-04V3		
D1003	ERA18-04V3		
D1005	ERA18-04V3		
D1006	RU2YXLFC1		
	(B,C,D)		
	RU3YXLFC1		
	(F,G)		
D1007	MA188		
	(B,C,D)		
	ERA18-04V3		
	(F,G)		
D1008	ERB81-004V1		
D1009	MA178		
	(B,C,D)		
	AK03V0		
	(F,G)		
D1011	MA4051NH	ZENER 5.1V	
D1012	MA858		
D1013	MA165		
D1015	MA7180A-TR	ZENER 18V	⚠
	OR MA7180B-TR	ZENER 18V	⚠
D1016	MA165		
D1051	MA4100N	ZENER 10V	
D1052	MA165		
D1053	MA165		
D3004	MA4091-M	ZENER 9.1V	
D4201	MA165		
	(F,G)		
D6001	VEKS5521	SENSOR LED UNIT	
D6002	MA165		
D6003	MA165		
D6007	MA165		
D6201	MA165		
D6202	MA165		
D6203	MA165		
D6204	MA165		
D6324	MA4068-M	ZENER 6.8V	
D7002	MA4300-TA	ZENER 30V	
		RESISTORS	
R1001	VRESC2TK275T	+-10% 1/2W 2.7M	⚠
R1003	VRESE2TJ334	1/2W 330K	
R1004	ERG2SJW333E	METAL OXIDE 2W 33K	
R1005	ERG1SJW560E	METAL OXIDE 1W 56	
R1006	ERJ6GEYJ222V	MGF CHIP 1/10W 2.2K	
R1007	ERDS2TJ101	100	
R1008	ERDS2TJ392	3.9K	
R1010	ERD25FYJ100T	10	⚠
R1011	ERD25FYJ100T	10	⚠
	(B,C,D)		
	ERD25FYJ4R7T	4.7	⚠
	(F,G)		
R1014	ERJ6GEYJ221V	MGF CHIP 1/10W 220	
R1015	ERJ6GEYJ221V	MGF CHIP 1/10W 220	
R1016	ERJ6GEYJ562V	MGF CHIP 1/10W 5.6K	
R1017	ERJ6GEYJ103V	MGF CHIP 1/10W 10K	
R1018	ERJ6GEYJ183V	MGF CHIP 1/10W 18K	
R1019	ERJ6GEYJ392V	MGF CHIP 1/10W 3.9K	
R1020	ERJ6GEYJ682V	MGF CHIP 1/10W 6.8K	
R1022	ERJ6GEYJ221V	MGF CHIP 1/10W 220	

Ref. No.	Part No.	Part Name	Remarks
R1024	ERD2FCVG121T	+-2% 120	⚠
	(B,C,D)		
	ERD2FCVG330T	+-2% 33	⚠
	(F,G)		
R1051	ERJ6GEYJ472V	MGF CHIP 1/10W 4.7K	
R1052	ERDS2TJ123	12K	
	(B,C,D)		
	ERDS2TJ153	15K	
	(F,G)		
R1053	ERDS2TJ153	15K	
	(F,G)		
R3002	ERJ6GEYJ331V	MGF CHIP 1/10W 330	
R3003	ERJ6GEYJ561V	MGF CHIP 1/10W 560	
R3004	ERJ6GEYJ750V	MGF CHIP 1/10W 75	
R3005	ERDS2TJ101	100	
R3021	ERJ6GEYJ332V	MGF CHIP 1/10W 3.3K	
R3022	ERJ6GEYJ152V	MGF CHIP 1/10W 1.5K	
R3023	ERJ6GEYJ121V	MGF CHIP 1/10W 120	
R3027	ERJ6GEYJ821V	MGF CHIP 1/10W 820	
R3029	ERJ6GEYJ125V	MGF CHIP 1/10W 1.2M	
R3030	ERJ6GEYJ103V	MGF CHIP 1/10W 10K	
R3031	ERJ6GEYJ474V	MGF CHIP 1/10W 470K	
R3033	ERJ6GEYJ222V	MGF CHIP 1/10W 2.2K	
R3034	ERJ6GEYJ121V	MGF CHIP 1/10W 120	
R3035	ERJ6GEYJ103V	MGF CHIP 1/10W 10K	
R3036	ERJ6GEYJ122V	MGF CHIP 1/10W 1.2K	
R3041	ERJ6GEYJ750V	MGF CHIP 1/10W 75	
R3301	ERJ6GEYJ222V	MGF CHIP 1/10W 2.2K	
R3302	ERJ6GEYJ222V	MGF CHIP 1/10W 2.2K	
R3303	ERJ6GEYJ473V	MGF CHIP 1/10W 47K	
R4001	ERJ6GEYJ103V	MGF CHIP 1/10W 10K	
R4002	ERJ6GEYJ334V	MGF CHIP 1/10W 330K	
R4003	ERJ6GEYJ221V	MGF CHIP 1/10W 220	
R4004	ERJ6GEYJ333V	MGF CHIP 1/10W 33K	
R4005	ERJ6GEYJ225V	MGF CHIP 1/10W 2.2M	
R4006	ERJ6GEYJ681V	MGF CHIP 1/10W 680	
R4007	ERJ6GEYJ821V	MGF CHIP 1/10W 820	
R4008	ERJ6GEYG223V	MGF CHIP +-2% 1/10W 22K	
R4009	ERJ6GEYJ473V	MGF CHIP 1/10W 47K	
	(B,C,D)		
R4010	ERJ6GEYJ473V	MGF CHIP 1/10W 47K	
	(B,C,D)		
	ERJ6GEYJ123V	MGF CHIP 1/10W 12K	
	(F,G)		
R4011	ERJ6GEYJ562V	MGF CHIP 1/10W 5.6K	
	(B,C,D)		
	ERJ6GEYJ682V	MGF CHIP 1/10W 6.8K	
	(F,G)		
R4012	ERJ6GEYJ682V	MGF CHIP 1/10W 6.8K	
R4013	ERJ6GEY0R00V	MGF CHIP 1/10W 0	●
	(B,C,D)		
R4014	ERJ6GEYJ472V	MGF CHIP 1/10W 4.7K	
R4015	ERJ6GEYJ222V	MGF CHIP 1/10W 2.2K	
R4017	ERJ6GEYJ561V	MGF CHIP 1/10W 560	
R4018	ERJ6GEYJ562V	MGF CHIP 1/10W 5.6K	
	(B,C,D)		
R4019	VCYSARH102KB	CERAMIC 50V 1000P	
R4028	ERJ6GEYJ222V	MGF CHIP 1/10W 2.2K	
R4101	ERJ6GEYJ224V	MGF CHIP 1/10W 220K	
R4102	ERJ6GEYG333V	MGF CHIP +-2% 1/10W 33K	
R4103	ERJ6GEYJ153V	MGF CHIP 1/10W 15K	
R4201	ERJ6GEYJ472V	MGF CHIP 1/10W 4.7K	
	(F,G)		
R4202	ERJ6GEYJ472V	MGF CHIP 1/10W 4.7K	
	(F,G)		
R4203	ERJ6GEYJ511V	MGF CHIP 1/10W 510	
	(F,G)		
R4204	ERJ6GEYJ511V	MGF CHIP 1/10W 510	
	(F,G)		
R4205	ERJ6GEYG333V	MGF CHIP +-2% 1/10W 33K	
	(F,G)		
R4206	ERJ6GEYG333V	MGF CHIP +-2% 1/10W 33K	
	(F,G)		
R4207	ERJ6GEYG153V	MGF CHIP +-2% 1/10W 15K	
	(F,G)		
R4208	ERJ6GEYG153V	MGF CHIP +-2% 1/10W 15K	
	(F,G)		

Ref. No.	Part No.	Part Name	Remarks
R4209	ERJ6GEYG333V	MGF CHIP +-2% 1/10W 33K	
	(G)		
R4210	ERJ6GEYG333V	MGF CHIP +-2% 1/10W 33K	
	(G)		
R4211	ERJ6GEYG153V	MGF CHIP +-2% 1/10W 15K	
	(G)		
R4212	ERJ6GEYG153V	MGF CHIP +-2% 1/10W 15K	
	(G)		
R4213	ERJ6GEYJ333V	MGF CHIP 1/10W 33K	
	(F,G)		
R4214	ERJ6GEYJ333V	MGF CHIP 1/10W 33K	
	(F,G)		
R4215	ERJ6GEYJ153V	MGF CHIP 1/10W 15K	
	(F,G)		
R4216	ERJ6GEYJ153V	MGF CHIP 1/10W 15K	
	(F,G)		
R4217	ERJ6GEYJ102V	MGF CHIP 1/10W 1K	
	(F,G)		
R4218	ERJ6GEYJ102V	MGF CHIP 1/10W 1K	
	(F,G)		
R4219	ERJ6GEYJ683V	MGF CHIP 1/10W 68K	
	(F,G)		
R4220	ERJ6GEYJ103V	MGF CHIP 1/10W 10K	
	(F,G)		
R4221	ERJ6GEYJ101V	MGF CHIP 1/10W 100	
	(F,G)		
R4222	ERJ6GEYJ101V	MGF CHIP 1/10W 100	
	(F,G)		
R4226	ERJ6GEY0R00V	MGF CHIP 1/10W 0	●
	(F,G)		
R4230	ERJ6GEY0R00V	MGF CHIP 1/10W 0	●
	(F,G)		
R4234	ERJ6GEY0R00V	MGF CHIP 1/10W 0	●
	(F,G)		
R4240	ERJ6GEY0R00V	MGF CHIP 1/10W 0	●
	(F,G)		
R4241	ERA6YEB153V	MGF CHIP +-0.1% 1/10W 15K	
	(F,G)		
R4243	ERDS2TJ152	1.5K	
	(F,G)		
R4244	ERJ6GEYJ152V	MGF CHIP 1/10W 1.5K	
	(F,G)		
R4245	ERJ6GEY0R00V	MGF CHIP 1/10W 0	●
	(F,G)		
R4246	ERJ6GEYJ333V	MGF CHIP 1/10W 33K	
	(F,G)		
R4247	ERJ6GEYJ123V	MGF CHIP 1/10W 12K	
	(F,G)		
R4248	ERJ6GEY0R00V	MGF CHIP 1/10W 0	●
	(F,G)		
R4249	ERJ6GEYJ102V	MGF CHIP 1/10W 1K	
	(F,G)		
R4601	ERJ6GEYJ123V	MGF CHIP 1/10W 12K	
	(F,G)		
R4602	ERJ6GEYJ472V	MGF CHIP 1/10W 4.7K	
	(B,C,D)		
	ERJ6GEYJ103V	MGF CHIP 1/10W 10K	
	(F,G)		
R4604	ERJ6GEYJ561V	MGF CHIP 1/10W 560	
	(F,G)		
R4605	ERJ6GEYJ562V	MGF CHIP 1/10W 5.6K	
	(F,G)		
R4606	ERJ6GEYJ682V	MGF CHIP 1/10W 6.8K	
	(F,G)		
R4607	ERJ6GEYJ101V	MGF CHIP 1/10W 100	
	(F,G)		
R4608	ERJ6GEYJ102V	MGF CHIP 1/10W 1K	
	(B,C,D)		
R4870	ERJ6GEYJ223V	MGF CHIP 1/10W 22K	
R6001	ERDS2TJ561	560	
R6002	ERDS2TJ561	560	
R6004	ERJ6GEYJ333V	MGF CHIP 1/10W 33K	
	(F,G)		
R6005	ERJ6GEYJ223V	MGF CHIP 1/10W 22K	
	(F,G)		
R6006	ERJ6GEYJ103V	MGF CHIP 1/10W 10K	
R6012	ERJ6GEYJ103V	MGF CHIP 1/10W 10K	
R6014	ERJ6GEYJ103V	MGF CHIP 1/10W 10K	

Ref. No.	Part No.	Part Name	Remarks
R6015	ERJ6GEYJ562V	MGF CHIP 1/10W 5.6K	
R6019	ERJ6GEYJ223V	MGF CHIP 1/10W 22K	
R6020	ERJ6GEYJ223V	MGF CHIP 1/10W 22K	
R6021	ERJ6GEYJ102V	MGF CHIP 1/10W 1K	
R6022	ERJ6GEYJ223V	MGF CHIP 1/10W 22K	
R6023	ERJ6GEYJ563V	MGF CHIP 1/10W 56K	
R6024	ERJ6GEYJ563V	MGF CHIP 1/10W 56K	
R6025	ERJ6GEYJ101V	MGF CHIP 1/10W 100	
R6026	ERJ6GEYJ101V	MGF CHIP 1/10W 100	
R6029	ERJ6GEYJ103V	MGF CHIP 1/10W 10K	
R6030	ERJ6GEYJ103V	MGF CHIP 1/10W 10K	
R6033	ERDS2TJ681	680	
R6034	ERJ6GEYJ472V	MGF CHIP 1/10W 4.7K	
R6035	ERJ6GEYJ103V	MGF CHIP 1/10W 10K	
R6037	ERDS2TJ391	390	
R6038	ERDS2TJ560	56	
R6051	ERJ6GEYJ103V	MGF CHIP 1/10W 10K	
R6052	ERJ6GEYJ103V	MGF CHIP 1/10W 10K	
R6053	ERJ6GEYJ103V	MGF CHIP 1/10W 10K	
R6056	ERJ6GEYJ103V	MGF CHIP 1/10W 10K	
R6057	ERJ6GEYJ103V	MGF CHIP 1/10W 10K	
R6058	ERJ6GEYJ103V	MGF CHIP 1/10W 10K	
R6059	ERJ6GEYJ182V	MGF CHIP 1/10W 1.8K	
R6060	ERJ6GEYJ475V	MGF CHIP 1/10W 4.7M	
R6061	ERJ6GEYJ102V	MGF CHIP 1/10W 1K	
R6062	ERJ6GEYJ224V	MGF CHIP 1/10W 220K	
R6063	ERJ6GEYJ153V	MGF CHIP 1/10W 15K	
R6064	ERJ6GEYJ153V	MGF CHIP 1/10W 15K	
R6066	ERJ6GEYJ473V	MGF CHIP 1/10W 47K	
R6068	ERJ6GEYJ103V	MGF CHIP 1/10W 10K	
R6069	ERJ6GEYJ104V	MGF CHIP 1/10W 100K	
R6070	ERJ6GEYJ104V	MGF CHIP 1/10W 100K	
R6073	ERJ6GEYJ473V	MGF CHIP 1/10W 47K	
R6074	ERDS2TJ272	2.7K	
R6075	ERJ6GEYJ223V	MGF CHIP 1/10W 22K	
R6077	ERJ6GEYJ103V	MGF CHIP 1/10W 10K	
R6085	ERJ6GEYJ223V	MGF CHIP 1/10W 22K	
R6086	ERJ6GEYJ223V	MGF CHIP 1/10W 22K	
R6087	ERJ6GEYJ223V	MGF CHIP 1/10W 22K	
R6088	ERJ6GEYJ102V	MGF CHIP 1/10W 1K	
R6093	ERJ6GEYJ103V	MGF CHIP 1/10W 10K	
	(F,G)		
R6094	ERJ6GEYJ103V	MGF CHIP 1/10W 10K	
R6099	ERJ6GEYJ103V	MGF CHIP 1/10W 10K	
R6102	ERJ6GEYJ102V	MGF CHIP 1/10W 1K	
R6109	ERJ6GEYJ103V	MGF CHIP 1/10W 10K	
R6110	ERJ6GEYJ103V	MGF CHIP 1/10W 10K	
R6201	EVNCYAA03B15	VARIABLE 100K	
	(B,C,D)		
	EVMF6SA00B15	VARIABLE 100K	
	(F,G)		
R6202	ERJ6GEYJ104V	MGF CHIP 1/10W 100K	
R6203	ERJ6GEYJ333V	MGF CHIP 1/10W 33K	
R6204	ERJ6GEYJ102V	MGF CHIP 1/10W 1K	
R6205	ERJ6GEYJ243V	MGF CHIP 1/10W 24K	
R6206	ERJ6GEYJ333V	MGF CHIP 1/10W 33K	
R6207	ERJ6GEYJ223V	MGF CHIP 1/10W 22K	
R6208	ERJ6GEYJ823V	MGF CHIP 1/10W 82K	
R6209	ERJ6GEYJ224V	MGF CHIP 1/10W 220K	
	(B,C,D)		
	ERJ6GEYJ184V	MGF CHIP 1/10W 180K	
	(F,G)		
R6210	ERJ6GEYJ475V	MGF CHIP 1/10W 4.7M	
R6211	ERJ6GEYJ221V	MGF CHIP 1/10W 220	
R6212	ERJ6GEYJ332V	MGF CHIP 1/10W 3.3K	
R6213	ERJ6GEYJ473V	MGF CHIP 1/10W 47K	
R6214	ERJ6GEYJ394V	MGF CHIP 1/10W 390K	
R6215	ERJ6GEYJ154V	MGF CHIP 1/10W 150K	
R6216	ERJ6GEYJ222V	MGF CHIP 1/10W 2.2K	
R6218	ERJ6GEYJ184V	MGF CHIP 1/10W 180K	
	(B,C,D)		
	ERJ6GEYJ154V	MGF CHIP 1/10W 150K	
	(F,G)		
R6219	ERJ6GEYJ274V	MGF CHIP 1/10W 270K	
R6221	ERJ6GEYJ221V	MGF CHIP 1/10W 220	
R6222	ERJ6GEYJ154V	MGF CHIP 1/10W 150K	
R6223	ERJ6GEYJ392V	MGF CHIP 1/10W 3.9K	
R6224	ERJ6GEYJ472V	MGF CHIP 1/10W 4.7K	

Ref. No.	Part No.	Part Name	Remarks
R6228	ERJ6GEYJ152V	MGF CHIP 1/10W 1.5K	
	(F,G)		
R6230	ERJ6GEYJ222V	MGF CHIP 1/10W 2.2K	
R6303	ERJ6GEYJ223V	MGF CHIP 1/10W 22K	
R6304	ERJ6GEYJ223V	MGF CHIP 1/10W 22K	
R6305	ERJ6GEYJ223V	MGF CHIP 1/10W 22K	
R6306	ERJ6GEYJ223V	MGF CHIP 1/10W 22K	
R6316	ERJ6GEYJ101V	MGF CHIP 1/10W 100	
R6346	ERDS2TJ470	47	
R6350	ERDS2TJ820	82	
R6351	ERDS2TJ750	75	
	(B,C,D)		
	ERDS2TJ820	82	
	(F,G)		
R6352	ERDS2TJ750	75	
	(B,C,D)		
	ERDS2TJ101	100	
	(F,G)		
R6353	ERJ6GEYJ473V	MGF CHIP 1/10W 47K	
R6358	ERJ6GEYJ223V	MGF CHIP 1/10W 22K	
R6359	VLQSH02R101K	100	
R7001	ERJ6GEYJ473V	MGF CHIP 1/10W 47K	
	(B,C,D)		
R7002	ERJ6GEYJ271V	MGF CHIP 1/10W 270	
R7003	ERDS2TJ102	1K	
R7004	ERJ6GEYJ102V	MGF CHIP 1/10W 1K	
	(B,C,D)		
	ERJ6GEYJ103V	MGF CHIP 1/10W 10K	
	(F,G)		
R7006	ERJ6GEYJ102V	MGF CHIP 1/10W 1K	
R7007	EVNCYAA03B24	VARIABLE 20K	
	(F,G)		
		CAPACITORS	
C1001	ECKRRS103ZVD	CERAMIC +80%-20% 125V 0.01	⚠
	OR VCKSTQG103ZY	CERAMIC +80%-20% 125V 0.01	⚠
	OR VCKSUQD103MY	CERAMIC +-20% 125V 0.01	⚠
C1002	ECKRRS332ME8	CERAMIC +-20% 125V 3300P	⚠
	OR VCKSTQG332MX	CERAMIC +-20% 125V 3300P	⚠
	OR VCKSUQD332MX	CERAMIC +-20% 125V 3300P	⚠
C1003	ECKRNB332ME8	CERAMIC +-20% 125V 3300P	⚠
	OR VCKSTQG332MX	CERAMIC +-20% 125V 3300P	⚠
	OR VCKSUQD332MX	CERAMIC +-20% 125V 3300P	⚠
C1004	ECEA2DU820YB	ELECTROLYTIC 200V 82	⚠
	(B,C,D)		
	ECEA2DU121YB	CERAMIC 200V 120	⚠
	(F,G)		
C1005	ECA2DHG4R7B	ELECTROTIC 200V 4.7	
C1006	ECKW2H221KB5	CERAMIC 500V 220P	
C1007	VCYSBRC104MX	CERAMIC +-20% 16V 0.1	
C1009	ECQB1H103JF	POLYESTER +-5% 50V 0.01	
C1010	ECUV1H101JCM	C CHIP +-5% 50V 100P	
C1011	ECA1HM4R7B	ELECTROLYTIC 50V 4.7	
	(B,C,D)		
	ECEA1HGE4R7	ELECTROLYTIC 50V 4.7	
	(F,G)		
C1012	ECEA1PEE331	ELECTROLYTIC 18V 330	
C1013	ECEA1PEE331	ELECTROLYTIC 18V 330	
C1014	ECEA1HGE4R7	ELECTROLYTIC 50V 4.7	
	(B,C,D)		
	ECEA1HGE470	ELECTROLYTIC 50V 47	
	(F,G)		
C1016	ECEA1PEE331	ELECTROLYTIC 18V 330	
C1017	ECA0JM102B	ELECTROLYTIC 6.3V 1000	
	(B,C,D)		
	ECA0JFE102XB	ELECTROLYTIC 6.3V 1000	
	(F,G)		
C1018	ECQB1H104P9	POLYESTER +100%-0% 50V 0.1	
C1019	ECA0JEE101	ELECTROLYTIC 6.3V 100	
C1021	ECEA1HKG010	ELECTROLYTIC 50V 1	
C1023	ECKW1H103ZF5	CERAMIC +80%-20% 50V 0.01	
C1025	ECKRRS101MBY	CERAMIC +-20% 125V 100P	⚠
	OR VCKSTNG101KW	CERAMIC 125V 100P	⚠
	OR VCKSUND101KW	CERAMIC 125V 100P	⚠
C1027	ECKRRS103ZVD	CERAMIC +80%-20% 125V 0.01	⚠
	OR VCKSTQG103ZY	CERAMIC +80%-20% 125V 0.01	⚠
	OR VCKSUQD103MY	CERAMIC +-20% 125V 0.01	⚠

Ref. No.	Part No.	Part Name				Remarks
C1028	ECEA1PEE331	ELECTROLYTIC		18V	330	
C1029	ECUV1H101JCN	C CHIP	+-5%	50V	100P	
C1030	VCYSBRE183KX	CERAMIC		25V	0.018	
C1032	ECEA0JKA470	ELECTROLYTIC		6.3V	47	
C1051	ECEA1HKAR47	ELECTROLYTIC		50V	0.47	
C1052	ECEA1CKA100	ELECTROLYTIC		16V	10	
C3001	ECA0JM471	ELECTROLYTIC		6.3V	470	
C3002	ECUV1E104ZFN	C CHIP	+80%-20%	25V	0.1	
C3011	ECUV1H103KBN	C CHIP		50V	0.01	
C3014	ECUV1E104ZFN	C CHIP	+80%-20%	25V	0.1	
C3015	ECUV1E104ZFN	C CHIP	+80%-20%	25V	0.1	
C3017	ECEA1EKA4R7	ELECTROLYTIC		25V	4.7	
C3018	ECUV1H181JCN	C CHIP	+-5%	50V	180P	
C3019	ECUV1H560JCN	C CHIP	+-5%	50V	56P	
C3021	ECUV1C224ZFN	C CHIP	+80%-20%	16V	0.22	
C3022	ECUV1E104ZFN	C CHIP	+80%-20%	25V	0.1	
C3023	ECEA0JKA221	ELECTROLYTIC		6.3V	220	
C3024	ECEA0JKA470	ELECTROLYTIC		6.3V	47	
C3025	ECUV1H103ZFN	C CHIP	+80%-20%	50V	0.01	
C3026	ECUV1E104ZFN	C CHIP	+80%-20%	25V	0.1	
C3027	ECUV1C224ZFN	C CHIP	+80%-20%	16V	0.22	
C3028	ECEA1CKA100	ELECTROLYTIC		16V	10	
C3029	ECUV1E104ZFN	C CHIP	+80%-20%	25V	0.1	
C3030	ECEA0JKA221	ELECTROLYTIC		6.3V	220	
C3031	ECEA1HKA2R2	ELECTROLYTIC		50V	2.2	
C3032	ECEA1HKA2R2	ELECTROLYTIC		50V	2.2	
C3033	ECEA0JKA470	ELECTROLYTIC		6.3V	47	
C3034	ECEA1HKAR22	ELECTROLYTIC		50V	0.22	
C3035	ECUV1H560JCN	C CHIP	+-5%	50V	56P	
C3036	ECUV1E104ZFN	C CHIP	+80%-20%	25V	0.1	
C3037	ECEA0JKA220	ELECTROLYTIC		6.3V	22	
C3038	ECA1HKA2R2	ELECTROLYTIC		50V	2.2	
	(G)					
C3039	ECUV1H822KBN	C CHIP		50V	8200P	
C3043	ECUV1H103ZFN	C CHIP	+80%-20%	50V	0.01	
C3044	ECUV1C474ZFN	C CHIP	+80%-20%	16V	0.47	
C3045	ECUV1C474ZFN	C CHIP	+80%-20%	16V	0.47	
C3047	ECUV1H181JCN	C CHIP	+-5%	50V	180P	
C3048	ECUV1H390JCN	C CHIP	+-5%	50V	39P	
C3049	ECUV1E104ZFN	C CHIP	+80%-20%	25V	0.1	
C3050	ECUV1E104ZFN	C CHIP	+80%-20%	25V	0.1	
C3051	ECEA0JKA221	ELECTROLYTIC		6.3V	220	
C3052	ECUV1H103ZFN	C CHIP	+80%-20%	50V	0.01	
C3053	ECEA1HKAR47	ELECTROLYTIC		50V	0.47	
C3054	ECEA1HKA2R2	ELECTROLYTIC		50V	2.2	
C3055	ECUV1H392KBN	C CHIP		50V	3900P	
C3056	ECEA1HKA010	ELECTROLYTIC		50V	1	
C3057	ECUV1E104ZFN	C CHIP	+80%-20%	25V	0.1	
C3058	ECEA0JKA221	ELECTROLYTIC		6.3V	220	
C3062	ECUV1E104ZFN	C CHIP	+80%-20%	25V	0.1	
C3101	ECEA1HKA010	ELECTROLYTIC		50V	1	
C3102	ECUV1E104ZFN	C CHIP	+80%-20%	25V	0.1	
C3104	ECUV1H103ZFN	C CHIP	+80%-20%	50V	0.01	
C3105	ECUV1H103ZFN	C CHIP	+80%-20%	50V	0.01	
C3106	ECUV1H103ZFN	C CHIP	+80%-20%	50V	0.01	
C3108	ECUV1H102KBN	C CHIP		50V	1000P	
C3109	ECEA0JKA221	ELECTROLYTIC		6.3V	220	
C3301	ECUV1E104ZFN	C CHIP	+80%-20%	25V	0.1	
C3302	ECUV1H103ZFN	C CHIP	+80%-20%	50V	0.01	
C3304	ECUV1H103ZFN	C CHIP	+80%-20%	50V	0.01	
C3305	ECUV1H181JCN	C CHIP	+-5%	50V	180P	
C3306	ECEA1HKA010	ELECTROLYTIC		50V	1	
C3307	ECUV1H180GCN	C CHIP	+-2%	50V	18P	
C3308	ECUV1H220JCN	C CHIP	+-5%	50V	22P	
C3310	ECUV1H103ZFN	C CHIP	+80%-20%	50V	0.01	
C3311	ECEA0JKA470	ELECTROLYTIC		6.3V	47	
C3312	ECUV1H150JCN	C CHIP	+-5%	50V	15P	
C4001	ECUV1E104KBN	C CHIP		25V	0.1	
C4002	ECEA1HKA010	ELECTROLYTIC		50V	1	
C4003	ECUV1H392KBN	C CHIP		50V	3900P	
C4004	ECUV1H103KBN	C CHIP		50V	0.01	
C4005	ECEA0JKA220	ELECTROLYTIC		6.3V	22	
C4006	ECUV1H102KBN	C CHIP		50V	1000P	
C4007	ECEA0JKA220	ELECTROLYTIC		6.3V	22	
C4008	ECEA0JKA470	ELECTROLYTIC		6.3V	47	
C4009	ECEA1CKA100	ELECTROLYTIC		16V	10	
C4010	ECUV1E273KBN	C CHIP		25V	0.027	
C4011	ECUV1H822KBN	C CHIP		50V	8200P	

Ref. No.	Part No.	Part Name				Remarks
C4012	ECEA1HKA010	ELECTROLYTIC		50V	1	
C4014	ECEA1HKA010	ELECTROLYTIC		50V	1	
C4015	ECUV1E104ZFN	C CHIP	+80%-20%	25V	0.1	
C4017	ECUV1H103KBN	C CHIP		50V	0.01	
	(F,G)					
C4018	ECEA1HKA010	ELECTROLYTIC		50V	1	
	(B,C,D)					
C4101	ECUV1H221JCN	C CHIP	+-5%	50V	220P	
C4102	ECHS1562JZ3	POLYESTER	+-5%	100V	5600P	
C4103	ECUV1H103KBN	C CHIP		50V	0.01	
C4104	ECUV1H103KBN	C CHIP		50V	0.01	
C4106	ECEA1CKA220	ELECTROLYTIC		16V	22	
C4201	ECUV1E473KBN	C CHIP		25V	0.047	
	(F,G)					
C4202	ECUV1E473KBN	C CHIP		25V	0.047	
	(F,G)					
C4203	ECEA0JKA330	ELECTROLYTIC		6.3V	33	
	(F,G)					
C4204	ECEA0JKA330	ELECTROLYTIC		6.3V	33	
	(F,G)					
C4205	ECEA1HKA2R2	ELECTROLYTIC		50V	2.2	
	(F,G)					
C4206	ECEA1HKA2R2	ELECTROLYTIC		50V	2.2	
	(F,G)					
C4207	ECEA0JKA101	ELECTROLYTIC		6.3V	100	
	(F,G)					
C4208	ECEA0JKA101	ELECTROLYTIC		6.3V	100	
	(F,G)					
C4209	ECUV1H153KBN	C CHIP		50V	0.015	
	(F,G)					
C4210	ECUV1H153KBN	C CHIP		50V	0.015	
	(F,G)					
C4211	ECUV1H103KBN	C CHIP		50V	0.01	
	(F,G)					
C4212	ECUV1H103KBN	C CHIP		50V	0.01	
	(F,G)					
C4213	ECEA1HKA010	ELECTROLYTIC		50V	1	
	(F,G)					
C4214	ECEA1HKA010	ELECTROLYTIC		50V	1	
	(F,G)					
C4215	ECEA1HKA010	ELECTROLYTIC		50V	1	
	(G)					
C4216	ECEA1HKA010	ELECTROLYTIC		50V	1	
	(G)					
C4217	ECEA1HKA010	ELECTROLYTIC		50V	1	
	(F,G)					
C4218	ECEA1HKA010	ELECTROLYTIC		50V	1	
	(F,G)					
C4219	ECEA1CKA100	ELECTROLYTIC		16V	10	
	(F,G)					
C4220	ECEA1CKA100	ELECTROLYTIC		16V	10	
	(F,G)					
C4221	ECEA1CKA100	ELECTROLYTIC		16V	10	
	(F,G)					
C4222	ECEA1CKA100	ELECTROLYTIC		16V	10	
	(F,G)					
C4235	ECEA0JKA101	ELECTROLYTIC		6.3V	100	
	(F,G)					
C4236	ECEA0JKA470	ELECTROLYTIC		6.3V	47	
	(F,G)					
C4237	ECEA1CKA100	ELECTROLYTIC		16V	10	
	(F,G)					
C4238	ECEA1CKA100	ELECTROLYTIC		16V	10	
	(F,G)					
C4239	ECEA1HKA010	ELECTROLYTIC		50V	1	
	(F,G)					
C4240	ECUV1C224ZFN	C CHIP	+80%-20%	16V	0.22	
	(F,G)					
C4242	ECUV1H103ZFN	C CHIP	+80%-20%	50V	0.01	
	(F,G)					
C4244	ERJ6GEY0R00V	MGF CHIP		1/10W	0	●
	(F,G)					
C4601	ECEA1CKA100	ELECTROLYTIC		16V	10	
	(F,G)					
C4603	ECEA1CKA100	ELECTROLYTIC		16V	10	
C4606	ECEA1CKA100	ELECTROLYTIC		16V	10	
	(F,G)					
C6002	ECUV1E104ZFN	C CHIP	+80%-20%	25V	0.1	

(E21, E23, E25, E26)

Ref. No.	Part No.	Part Name	Remarks
C6004	ECUV1H101JCN	C CHIP +-5% 50V 100P	
C6005	ECUV1H150GCN	C CHIP +-2% 50V 15P	
C6006	ECUV1H120JCN	C CHIP +-5% 50V 12P	
C6007	ECUV1H101JCN	C CHIP +-5% 50V 100P	
C6008	ECUV1E104ZFN	C CHIP +80%-20% 25V 0.1	
C6009	ECUV1H101JCN	C CHIP +-5% 50V 100P	
C6010	ECUV1H101JCN	C CHIP +-5% 50V 100P	
C6016	ECEA0JU471	ELECTROLYTIC 6.3V 470	
C6019	ECEA0JKA101	ELECTROLYTIC 6.3V 100	
C6201	ECEA0JKA470	ELECTROLYTIC 6.3V 47	
C6202	ECEA0JKA330	ELECTROLYTIC 6.3V 33	
C6203	ECUV1H103KBN	C CHIP 50V 0.01	
C6204	ECUV1H103KBN	C CHIP 50V 0.01	
C6205	ECUV1H102KBN	C CHIP 50V 1000P	
C6206	ECUV1H103KBN	C CHIP 50V 0.01	
C6207	ECQB1H393KF	POLYESTER 50V 0.039	
C6208	ECEA1HKA010	ELECTROLYTIC 50V 1	
C6209	ECEA1CKA100	ELECTROLYTIC 16V 10	
C6211	ECUV1H272KBN	C CHIP 50V 2700P	
C6212	ECUV1E104KBN	C CHIP 25V 0.1	
C6213	ECUV1H151KN	C CHIP 50V 150P	
C6214	ECUV1H102KBN	C CHIP 50V 1000P	
C6217	ECUV1E104ZFN	C CHIP +80%-20% 25V 0.1	
C6218	ECEA1CKA100	ELECTROLYTIC 16V 10	
C6221	ECEA0JKA220	ELECTROLYTIC 6.3V 22	
C6222	ECUV1H272KBN	C CHIP 50V 2700P	
C6223	ECUV1E333KBN	C CHIP 25V 0.033	
C6224	ECEA0JKA101	ELECTROLYTIC 6.3V 100	
C6228	ECUV1E104ZFN	C CHIP +80%-20% 25V 0.1	
C6305	ECEA0JKA470	ELECTROLYTIC 6.3V 47	
C6306	ECA0JM471	ELECTROLYTIC 6.3V 470	
C6307	ECUV1E104ZFN	C CHIP +80%-20% 25V 0.1	
C6308	ECUV1H103ZFN	C CHIP +80%-20% 50V 0.01	
C7001	ECEA0JKA221	ELECTROLYTIC 6.3V 220	
C7003	ECUV1H103ZFN	C CHIP +80%-20% 50V 0.01	
C7005	ECUV1E183KBN	C CHIP 25V 0.018	
	(B,C,D)		
C7006	ECUV1H103ZFN	C CHIP +80%-20% 50V 0.01	
C7008	ECEA1CKA101	ELECTROLYTIC 16V 100	
C7010	ECUV1H102KBN	C CHIP 50V 1000P	
C7015	ECUV1C105ZFN	C CHIP +80%-20% 16V 1	
C7018	ECUV1H103ZFN	C CHIP +80%-20% 50V 0.01	
C7019	ECUV1H103ZFN	C CHIP +80%-20% 50V 0.01	
C7020	ECUV1H103ZFN	C CHIP +80%-20% 50V 0.01	
C7022	ECUV1H330JCN	C CHIP +-5% 50V 33P	
C7023	ECUV1H330JCN	C CHIP +-5% 50V 33P	
C7024	ECUV1H103KBN	C CHIP 50V 0.01	
		COILS	
L1001	ELF15N005AB	HIGH PASS FILTER 0.5A 18M	⚠
	OR VLQS0166	HIGH PASS FILTER 0.5A 18M	⚠
	OR VLQS0167	HIGH PASS FILTER 0.5A 18M	⚠
L1002	VLQSAB7D220K	22	
L1003	VLQSAB7D100K	10	
L1006	VLPS0083		
L3014	VLQSH02R470K	47	
L3016	ELESN330KA	33	
L3018	ELESN470KA	47	
L3101	ELESN101KA	100	
L3302	VLQSH02R180J	+-5% 18	
L4001	ELELN153KA	15M	
L4101	ELESN471KA	470	
L7001	ELESN120KA	12	
L7002	ELESN101KA	100	
L7004	VLPS0092	COIL CHIP	
		CRYSTAL OSCILLATOR	
X3010	VSXS0195		
X6001	VSXS0191		
X6301	EF0EC8004T4		

Ref. No.	Part No.	Part Name	Remarks
		PIN HEADERS	
P1001	VJPS1154	CONNECTOR 2P	
P3001	VJPS0884	CONNECTOR 15P	
	(B,C,D)		
	VJPS0885	CONNECTOR 20P	
	(F,G)		
P4001	VJSS0888	FE CONNECTOR 2P	
P6001	VJPS0712	CONNECTOR 19P	
	(G)		
P6002	VJPS0881	CONNECTOR 8P	
P6201	VJPS0883	CONNECTOR 14P	
		SWITCHES	
SW6001	VSHS0058	LEAF SWITCH-SAFETY TAB	
SW6002	VSSS0159	MODE SELECT SWITCH	
SW6303	EVQ21309K	PUSH SWITCH	
	(B,C,D,F)		
SW6305	EVQ21309K	PUSH SWITCH	
	(B,C,D,F)		
SW6306	EVQ21309K	PUSH SWITCH	
	(B,C,D,F)		
SW6307	EVQ21309K	PUSH SWITCH	
SW6308	EVQ21309K	PUSH SWITCH	
	(G)		
SW6309	EVQ21309K	PUSH SWITCH	
SW6310	EVQ21309K	PUSH SWITCH	
SW6311	EVQ21309K	PUSH SWITCH	
SW6312	EVQ21309K	PUSH SWITCH	
SW6313	EVQ21309K	PUSH SWITCH	
SW7001	VSSS0152	SELECT SWITCH	
		FUSE & PROTECTOR	
F1001	VSFS0003A16	FUSE 125V 1.6A	⚠
	OR VSFS0028A16	FUSE 125V 1.6A	⚠
	OR VSFS0030B16	FUSE 125V 1.6A	⚠
	OR XBA1C16NU100	FUSE 125V 1.6A	⚠
PR1001	ICP-N38-TP1	IC PROTECTOR 1.5A	⚠
	OR UNH000600A	IC PROTECTOR 1.5A	⚠
PR1002	ICP-N38-TP1	IC PROTECTOR 1.5A	⚠
	OR UNH000600A	IC PROTECTOR 1.5A	⚠
		TRANSFORMER	
T1001	ETS28AD1F5NP		⚠
	OR VTPS0034-1		⚠
	OR VTPS0038-1		⚠
	OR VTPS0040-1		⚠
T4101	EIQ7QF018Q		
		MISCELLANEOUS	
JK3001	VJHS0720	A/V JACK SOCKET	
	(B,C,D)		
	VJHS0727	A/V JACK SOCKET	
	(F,G)		
E21	VEQS0602A	TUNER,UHF/VHF NR	
	(B,C,D)		
E21	VEQS0603	TUNER,UHF/VHF NR	
	(F,G)		
E23	VJSS0896	FUSE HOLDER	
E25	VEKS5520	DISPLAY TUBE UNIT	
E26	VCRS0213	MTS/SAP HIC	
	(F,G)		

(E31)

Ref. No.	Part No.	Part Name	Remarks
		OPERATION C.B.A.	■
		(G)	
		DIODES	
D7801	MA4051-M	ZENER 5.1V	
D7802	MA4051-M	ZENER 5.1V	
		RESISTORS	
R7801	ERJ6GEYJ750V	MGF CHIP 1/10W 75	
R7802	ERJ6GEY0R00V	MGF CHIP 1/10W 0	●
R7803	ERJ6GEY0R00V	MGF CHIP 1/10W 0	●
		PIN HEADERS	
P6301	VJSS0761	CONNECTOR 19P	
		SWITCHES	
SW6350	EVQ21405R	PUSH SWITCH	
SW6351	EVQ21405R	PUSH SWITCH	
		MISCELLANEOUS	
JK7801	VJHS0729	FRONT A/V JACK SOCKET	
		MISCELLANEOUS	
E31	VJRS0091	CONNECTION PIECE	
		HEAD AMP C.B.A.	■
		(A)	
		INTEGRATED CIRCUITS	
IC2601	AN3809K	IC, LINEAR CYL. DRIVE	
IC3501	AN3371SB	IC, LINEAR HEAD AMP	
		RESISTORS	
R2601	ERJ6GEYJ330V	MGF CHIP 1/10W 33	
R2602	ERJ6GEYJ330V	MGF CHIP 1/10W 33	
R2603	ERJ6GEYJ330V	MGF CHIP 1/10W 33	
R2604	ERDS2TJ1R0	1	
R2605	ERDS2TJ1R2	1.2	
R2606	ERJ6GEYJ561V	MGF CHIP 1/10W 560	
R3502	ERJ6GEY0R00V	MGF CHIP 1/10W 0	●
R3503	ERJ6GEY0R00V	MGF CHIP 1/10W 0	●
R3507	ERJ6GEYJ331V	MGF CHIP 1/10W 330	
		CAPACITORS	
C2604	ECUV1E104KBN	C CHIP 25V 0.1	
C2605	ECUV1E104KBN	C CHIP 25V 0.1	
C2606	ECUV1E104KBN	C CHIP 25V 0.1	
C2607	ECUV1E104KBN	C CHIP 25V 0.1	
C2608	ECUV1E104ZFN	C CHIP +80%-20% 25V 0.1	
C2609	ECUV1E104ZFN	C CHIP +80%-20% 25V 0.1	
C2610	ECUV1H103ZFN	C CHIP +80%-20% 50V 0.01	
C2611	ECUV1E333KBN	C CHIP 25V 0.033	
C2612	ECUV1E104ZFN	C CHIP +80%-20% 25V 0.1	
C2613	ECEA1EKA4R7	ELECTROLYTIC 25V 4.7	
C2614	ECEA1EKA4R7	ELECTROLYTIC 25V 4.7	
C2615	ECEA1EKA4R7	ELECTROLYTIC 25V 4.7	
C3504	ECUV1H103ZFN	C CHIP +80%-20% 50V 0.01	
C3505	ECEA1CKA470	ELECTROLYTIC 16V 47	
C3506	ECUV1E104ZFN	C CHIP +80%-20% 25V 0.1	
C3508	ECUV1E104ZFN	C CHIP +80%-20% 25V 0.1	
C3511	ECUV1E104ZFN	C CHIP +80%-20% 25V 0.1	
C3512	ECUV1E104ZFN	C CHIP +80%-20% 25V 0.1	
C3513	ECUV1E104ZFN	C CHIP +80%-20% 25V 0.1	
C3528	ECUV1E104ZFN	C CHIP +80%-20% 25V 0.1	
C3529	ECUV1H103ZFN	C CHIP +80%-20% 50V 0.01	

Ref. No.	Part No.	Part Name	Remarks
		COILS	
L3501	ELESN101KA	100	
		PIN HEADERS	
P3501	VJSS0883	CONNECTOR 12P	
		HEAD AMP C.B.A.	■
		(B,C,D,E)	
		INTEGRATED CIRCUITS	
IC2601	AN3809K	IC, LINEAR CYL. DRIVE	
IC3501	AN3361SB	IC, LINEAR HEAD AMP	
		RESISTORS	
R2601	ERJ6GEYJ330V	MGF CHIP 1/10W 33	
R2602	ERJ6GEYJ330V	MGF CHIP 1/10W 33	
R2603	ERJ6GEYJ330V	MGF CHIP 1/10W 33	
R2604	ERDS2TJ1R0	1	
R2605	ERDS2TJ1R2	1.2	
R2606	ERJ6GEYJ561V	MGF CHIP 1/10W 560	
R3501	ERJ6GEYJ473V	MGF CHIP 1/10W 47K	
R3502	ERJ6GEYJ560V	MGF CHIP 1/10W 56	
R3503	ERJ6GEYJ560V	MGF CHIP 1/10W 56	
R3504	ERJ6GEYJ560V	MGF CHIP 1/10W 56	
R3505	ERJ6GEYJ560V	MGF CHIP 1/10W 56	
R3506	ERJ6GEYJ561V	MGF CHIP 1/10W 560	
R3507	ERJ6GEYJ561V	MGF CHIP 1/10W 560	
		CAPACITORS	
C2604	ECUV1E104KBN	C CHIP 25V 0.1	
C2605	ECUV1E104KBN	C CHIP 25V 0.1	
C2606	ECUV1E104KBN	C CHIP 25V 0.1	
C2607	ECUV1E104KBN	C CHIP 25V 0.1	
C2608	ECUV1E104ZFN	C CHIP +80%-20% 25V 0.1	
C2609	ECUV1E104ZFN	C CHIP +80%-20% 25V 0.1	
C2610	ECUV1H103ZFN	C CHIP +80%-20% 50V 0.01	
C2611	ECUV1E333KBN	C CHIP 25V 0.033	
C2612	ECUV1E104ZFN	C CHIP +80%-20% 25V 0.1	
C2613	ECEA1EKA4R7	ELECTROLYTIC 25V 4.7	
C2614	ECEA1EKA4R7	ELECTROLYTIC 25V 4.7	
C2615	ECEA1EKA4R7	ELECTROLYTIC 25V 4.7	
C3504	ECUV1H103ZFN	C CHIP +80%-20% 50V 0.01	
C3505	ECEA1CKA470	ELECTROLYTIC 16V 47	
C3506	ECUV1E104ZFN	C CHIP +80%-20% 25V 0.1	
C3507	ECUV1H103KBN	C CHIP 50V 0.01	
C3508	ECUV1E104ZFN	C CHIP +80%-20% 25V 0.1	
C3511	ECUV1E104ZFN	C CHIP +80%-20% 25V 0.1	
C3512	ECUV1E104ZFN	C CHIP +80%-20% 25V 0.1	
C3513	ECUV1E104ZFN	C CHIP +80%-20% 25V 0.1	
C3519	ECUV1E104ZFN	C CHIP +80%-20% 25V 0.1	
C3520	ECUV1E104ZFN	C CHIP +80%-20% 25V 0.1	
C3524	ECUV1E104ZFN	C CHIP +80%-20% 25V 0.1	
C3525	ECUV1E104ZFN	C CHIP +80%-20% 25V 0.1	
C3528	ECUV1E104ZFN	C CHIP +80%-20% 25V 0.1	
C3529	ECUV1H103ZFN	C CHIP +80%-20% 50V 0.01	
C3532	ECUV1E104ZFN	C CHIP +80%-20% 25V 0.1	
C3533	ECUV1H103ZFN	C CHIP +80%-20% 50V 0.01	
		COILS	
L3501	ELESN101KA	100	
		PIN HEADERS	
P3501	VJSS0885	CONNECTOR 15P	

Ref. No.	Part No.	Part Name	Remarks
		Hi-Fi AUDIO/VIDEO HEAD AMP C.B.A. (F,G,H)	■
		INTEGRATED CIRCUITS	
IC2601	AN3809K	IC, LINEAR CYL. DRIVE	
IC3501	AN3361SB	IC, LINEAR HEAD AMP	
IC4401	AN3328S	IC, LINEAR Hi-Fi AUDIO HEAD AMP	
		RESISTORS	
R2601	ERJ6GEYJ330V	MGF CHIP 1/10W 33	
R2602	ERJ6GEYJ330V	MGF CHIP 1/10W 33	
R2603	ERJ6GEYJ330V	MGF CHIP 1/10W 33	
R2604	ERDS2TJ1R0	1	
R2605	ERDS2TJ1R2	1.2	
R2606	ERJ6GEYJ561V	MGF CHIP 1/10W 560	
R3501	ERJ6GEYJ473V	MGF CHIP 1/10W 47K	
R3502	ERJ6GEYJ560V	MGF CHIP 1/10W 56	
R3503	ERJ6GEYJ560V	MGF CHIP 1/10W 56	
R3504	ERJ6GEYJ560V	MGF CHIP 1/10W 56	
R3505	ERJ6GEYJ560V	MGF CHIP 1/10W 56	
R3506	ERJ6GEYJ561V	MGF CHIP 1/10W 560	
R3507	ERJ6GEYJ561V	MGF CHIP 1/10W 560	
R4405	ERJ6GEYJ102V	MGF CHIP 1/10W 1K	
R4406	ERJ6GEYJ180V	MGF CHIP 1/10W 18	
R4407	ERJ6GEYJ561V	MGF CHIP 1/10W 560	
		CAPACITORS	
C2604	ECUV1E104KBN	C CHIP 25V 0.1	
C2605	ECUV1E104KBN	C CHIP 25V 0.1	
C2606	ECUV1E104KBN	C CHIP 25V 0.1	
C2607	ECUV1E104KBN	C CHIP 25V 0.1	
C2608	ECUV1E104ZFN	C CHIP +80%-20% 25V 0.1	
C2609	ECUV1E104ZFN	C CHIP +80%-20% 25V 0.1	
C2610	ECUV1H103ZFN	C CHIP +80%-20% 50V 0.01	
C2611	ECUV1E333KBN	C CHIP 25V 0.033	
C2612	ECUV1E104ZFN	C CHIP +80%-20% 25V 0.1	
C2613	ECEA1EKA4R7	ELECTROLYTIC 25V 4.7	
C2614	ECEA1EKA4R7	ELECTROLYTIC 25V 4.7	
C2615	ECEA1EKA4R7	ELECTROLYTIC 25V 4.7	
C3504	ECUV1H103ZFN	C CHIP +80%-20% 50V 0.01	
C3505	ECEA1CKA470	ELECTROLYTIC 16V 47	
G3506	ECUV1E104ZFN	C CHIP +80%-20% 25V 0.1	
C3507	ECUV1H103KBN	C CHIP 50V 0.01	
C3508	ECUV1E104ZFN	C CHIP +80%-20% 25V 0.1	
C3511	ECUV1E104ZFN	C CHIP +80%-20% 25V 0.1	
C3512	ECUV1E104ZFN	C CHIP +80%-20% 25V 0.1	
C3513	ECUV1E104ZFN	C CHIP +80%-20% 25V 0.1	
C3519	ECUV1E104ZFN	C CHIP +80%-20% 25V 0.1	
C3520	ECUV1E104ZFN	C CHIP +80%-20% 25V 0.1	
C3523	ECUV1E104ZFN	C CHIP +80%-20% 25V 0.1	
C3524	ECUV1E104ZFN	C CHIP +80%-20% 25V 0.1	
C3528	ECUV1E104ZFN	C CHIP +80%-20% 25V 0.1	
C3529	ECUV1H103ZFN	C CHIP +80%-20% 50V 0.01	
C3532	ECUV1E104ZFN	C CHIP +80%-20% 25V 0.1	
C3533	ECUV1H103ZFN	C CHIP +80%-20% 50V 0.01	
C4401	ECUV1H102KBN	C CHIP 50V 1000P	
C4402	ECUV1H102KBN	C CHIP 50V 1000P	
C4405	ECUV1H103ZFN	C CHIP +80%-20% 50V 0.01	
C4406	ECUV1H472KBN	C CHIP 50V 4700P	
C4408	ECEA1CKA100	ELECTROLYTIC 16V 10	
C4409	ECUV1H103ZFN	C CHIP +80%-20% 50V 0.01	
C4411	ECUV1H103ZFN	C CHIP +80%-20% 50V 0.01	
C4412	ECUV1E104ZFN	C CHIP +80%-20% 25V 0.1	
C4413	ECUV1E104ZFN	C CHIP +80%-20% 25V 0.1	
C4414	ECEA0JKA101	ELECTROLYTIC 6.3V 100	
		COILS	
L3501	ELESN101KA	100	
L4401	VLQSH02R101K	100	
		PIN HEADERS	
P3501	VJSS0886	CONNECTOR 20P	

(E22)

Ref. No.	Part No.	Part Name	Remarks
		JUNCTION C.B.A.	■
		RESISTORS	
R2531	ERDS2TJ270	27	
		CAPACITORS	
C2531	ECEA1CKA100	ELECTROLYTIC 16V 10	
C2532	ECEA1CKA100	ELECTROLYTIC 16V 10	
C2533	ECEA1CKA100	ELECTROLYTIC 16V 10	
		PIN HEADERS	
P2531	VJSS0884	CONNECTOR 14P	
		ELECTRICAL PARTS LOCATED ON CHASSIS	
E22	VJAS0195-F	AC CORD W/PLUG, 120V	⚠
	(A,D,E,F,G,H)		
E22	VJAS0195-FS	AC CORD KIT W/PLUG, 120V	⚠
	(B,C)		
		SUMMARY OF "E" ITEM NUMBERS REFER TO ELECTRICAL PARTS LIST FOR MODEL INFORMATION	
E1	VEPS6026AC	MAIN C.B.A.	
E1	VEPS6023GH	MAIN C.B.A.	
E1	VEPS6023GJ	MAIN C.B.A.	
E1	VEPS6026GB	MAIN C.B.A.	
E1	VEPS6023HH	MAIN C.B.A.	
E1	VEPS6023HJ	MAIN C.B.A.	
E1	VEPS6026HB	MAIN C.B.A.	
E4	VEPS8022A	OPERATION C.B.A.	
E6	VEPS5012A	HEAD AMP C.B.A.	
E6	VEPS5011A	HEAD AMP C.B.A.	
E6	VEPS5010A	Hi-Fi AUDIO/VIDEO HEAD AMP C.B.A.	
E7	VEPS0A25A	JUNCTION C.B.A.	
E21	VEQS0602A	TUNER, UHF/VHF NR	
E21	VEQS0603	TUNER, UHF/VHF NR	
E22	VJAS0195-F	AC CORD W/PLUG, 120V	
E22	VJAS0195-FS	AC CORD KIT W/PLUG, 120V	
E23	VJSS0896	FUSE HOLDER	
E24	VEKS5526	LED HOLDER UNIT	
E25	VEKS5520	DISPLAY TUBE UNIT	
E26	VCRS0213	MTS/SAP HIC	
E31	VJRS0091	CONNECTION PIECE	

ORDER NO. VRD9701M101

Service Manual

Simplified

V18124

Video Cassette Recorder

Panasonic VHS

NV-SD4070PN
NV-HD6070PN

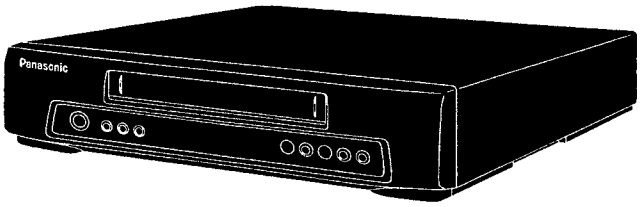

Please use this manual together with the Service Manual for Order No. MKS9612M301
Model No. PV-7400/PV-7450. V18003

SPECIFICATIONS

ITEM	SPECIFICATION	1	2
Power	Source: 120V AC ± 10%, 60 Hz ± 0.5%	O	O
	Consumption: Approx. 18 watts (Power on), Approx. 6 watts (Power off)	O	—
	Approx. 23 watts (Power on), Approx. 7 watts (Power off)	—	O
Video	Head: 4 rotary heads helical scanning system	O	O
	Input Level: VIDEO IN Jack (Phono type) 1.0 Vp-p 75Ω unbalanced Output Level: VIDEO OUT Jack (Phono type) 1.0 Vp-p 75Ω unbalanced Signal-to-Noise Ratio: SP: more than 43 dB LP/SLP: more than 41 dB Horizontal Resolution: Color/Monochrome: more than 230 lines	O	O
Audio	Head: Normal Mono: 1 stationary head	O	O
	Hi-Fi Stereo: 2 rotary heads	—	O
	Input Level: AUDIO IN Jack (Phono type) -10 dBv 50kΩ unbalanced	O	O
	Output Level: AUDIO OUT Jack (Phono type) -8 dBv 600Ω unbalanced	O	—
	AUDIO OUT Jack (Phono type) -8 dBv 1kΩ unbalanced	—	O
	Frequency Response: Normal Mono: SP: 100 Hz ~ 8 kHz	O	O
	LP: 100 Hz ~ 6 kHz	O	O
	SLP: 100 Hz ~ 5 kHz	O	O
	Hi-Fi Stereo: SP/LP/SLP: 20 Hz ~ 20 kHz	—	O
	Signal-to-Noise Ratio: Normal Mono: SP: more than 42 dB	O	O
	LP/SLP: more than 40 dB	O	O
	Hi-Fi Stereo: SP/LP/SLP: more than 60 dB	—	O
	Wow and Flutter: Normal Mono: SP: Less than 0.2% WRMS	O	O
	LP: Less than 0.3% WRMS	O	O
	SLP: Less than 0.4% WRMS	O	O
	Hi-Fi Stereo: Less than 0.015% WRMS	—	O

ITEM	SPECIFICATION	1	2
RF Out	CH 3/CH 4 switchable 72 dBμ (open voltage) 75Ω unbalanced	O	O
Tuner	Broadcast Channels: VHF 2 ~ 13, UHF 14 ~ 69 CATV Channels: Midband A through I (14 ~ 22) Superband J through W (23 ~ 36) Hyperband AA ~ EEE (37 ~ 64) Lowband A-5 ~ A-1 (95 ~ 99) Special CATV channel 5A (01) Ultraband 65 ~ 94, 100 ~ 125	O	O
Video Signal	EIA Standard (525 lines, 60 fields) NTSC Color Signal	O	O
Tape Speed	SP: 1-5/16 i.p.s (33.35 mm/sec), LP: 21/32 i.p.s (16.67 mm/sec), SLP: 7/16 i.p.s (11.12 mm/sec) Record/Playback Time: 8 Hrs with 160 min. type tape used in SLP mode FF/REW Time: Less than 3 min. (120 min. type tape)	O	O
Tape Format	Tape width 1/2" (12.7 mm) high density tape	O	O
Operating Condition	41°F(5°C) ~ 104°F(40°C) (Temperature) 10% ~ 75% (Humidity)	O	O
Dimension	14-15/16"(380 mm) (W) X 3-2/3"(93 mm) (H) X 11-13/16"(300 mm) (D)	O	O
Weight	7.5 lbs. (3.4 kg)	O	O

1. NV-SD4070PN
2. NV-HD6070PN

Weight and dimensions shown are approximate.
Specifications are subject to change without notice.

Panasonic

©1997 Matsushita Electronics Industries LTD.
All rights reserved. Unauthorized copying and distribution is a violation of law.

Printed in Japan

⚠ WARNING

This service information is designed for experienced repair technicians only and is not designed for use by the general public. It does not contain warnings or cautions to advise non-technical individuals of potential dangers in attempting to service a product. Products powered by electricity should be serviced or repaired only by experienced professional technicians. Any attempt to service or repair the product or products dealt with in this service information by anyone else could result in serious injury or death.

I. DIFFERENCES BETWEEN NV-SD4070PN and PV-7400

Model NV-SD4070PN is similar to model PV-7400.
Use this Service Manual VRD9701M101 when servicing this model.

COMPARISON CHART BETWEEN NV-SD4070PN & PV-7400

MECHANICAL REPLACEMENT PARTS LIST

Page No.	Ref. No.	Section No.		Pcs/ Set	PV-7400 ➡ Part No.	NV-SD4070PN Part No.	Part Name
7-2	71	4		1	VYPS6668	VYPS6733	FRONT PANEL ASS'Y
7-2	72	4		1	VYPS6666	VYPS6737	CASSETTE DOOR-LID UNIT
7-2	121	5		1	VPGS3788	VPGS3822	PACKING CASE, PAPER
7-2	122	5		1	VQFS3327	VQFS3370	FAN BAG

ELECTRICAL REPLACEMENT PARTS LIST

Page No.	Ref. No.		Pcs/ Set	PV-7400 ➡ Part No.	NV-SD4070PN Part No.	Part Name
7-8	IC6001		1	MN675048A5A3	MN675048A5A4	IC, 8BIT MICROPROCESSOR

II. DIFFERENCES BETWEEN NV-HD6070PN and PV-7450

Model NV-HD6070PN is similar to model PV-7450.
Use this Service Manual VRD9701M101 when servicing this model.

COMPARISON CHART BETWEEN NV-SD4070PN & PV-7400

MECHANICAL REPLACEMENT PARTS LIST

Page No.	Ref. No.	Section No.		Pcs/ Set	PV-7450 ➡ Part No.	NV-HD6070PN Part No.	Part Name
7-2	71	4		1	VYPS6670	VYPS6734	FRONT PANEL ASS'Y
7-2	72	4		1	VYPS6667	VYPS6737	CASSETTE DOOR-LID UNIT
7-2	121	5		1	VPGS3789	VPGS3823	PACKING CASE, PAPER
7-2	122	5		1	VQFS3327	VQFS3370	FAN BAG

ELECTRICAL REPLACEMENT PARTS LIST

Page No.	Ref. No.		Pcs/ Set	PV-7450 ➡ Part No.	NV-HD6070PN Part No.	Part Name
7-8	IC6001		1	MN675048A5A3	MN675048A5A4	IC, 8BIT MICROPROCESSOR